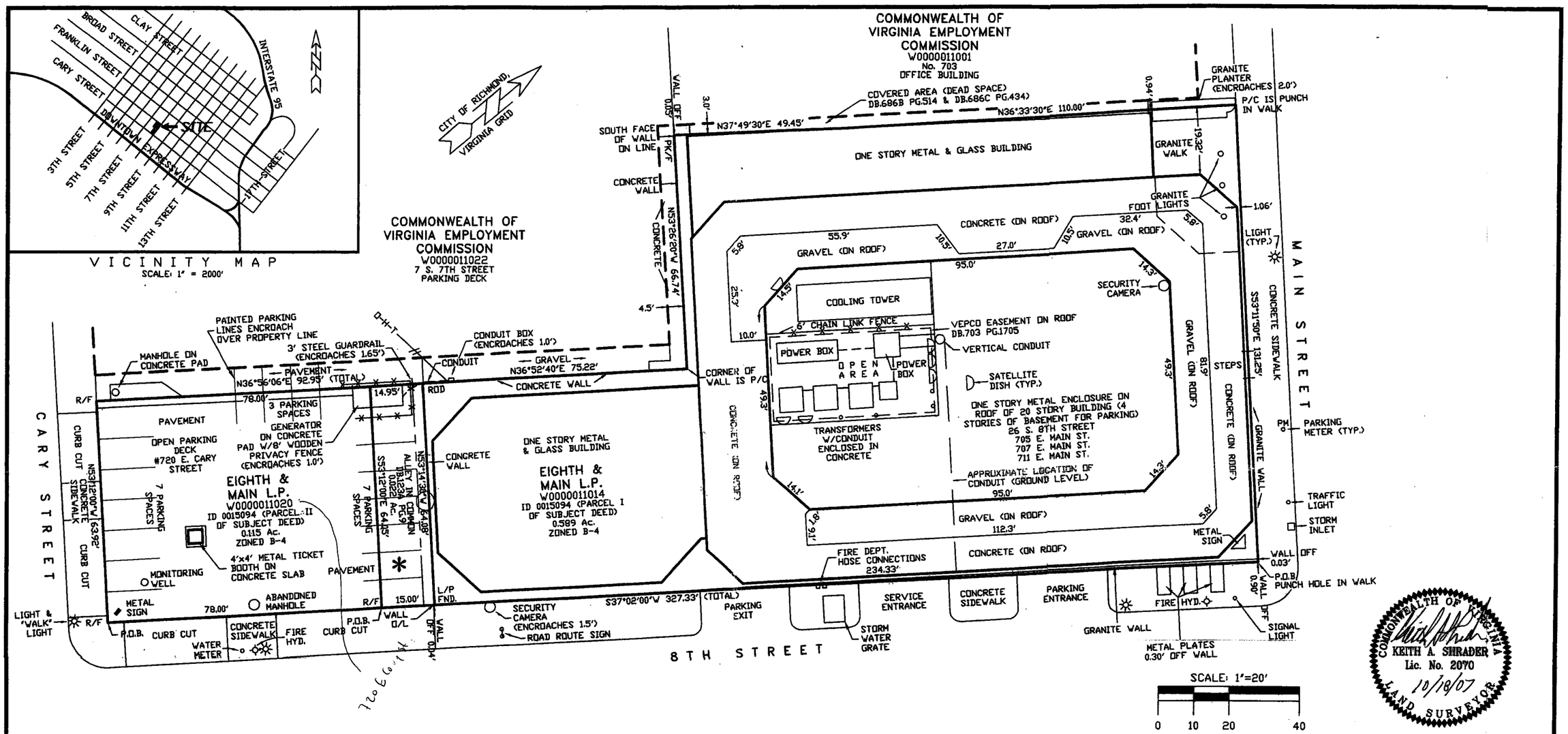

SCALE: 1"=20'

0 10 20 40

COMMONWEALTH OF VIRGINIA
KEITH A. SHRADER
Lic. No. 2070
10/18/07
LAND SURVEYOR

* THE AREA AS SHOWN IN THE 'ALLEY IN COMMON' DB.123A PG.9 WAS ALSO CONVEYED TO EIGHTH & MAIN L.P. BY A QUITCLAIM DEED DATED JUNE 22, 2000 AND RECORDED IN THE CLERK'S OFFICE OF THE CITY OF RICHMOND ON JUNE 23, 2000 AS INSTRUMENT No. 0015095.

PARCEL I
20 STORY BUILDING
PARKING SCHEDULE

LEVEL	SPACES
G4B	36
G4A	17
G3B	35
G3A	18
G2B	34
G2A	16
G1	14
TOP	10 + 2 RESERVED WITHOUT PAINT
	182 TOTAL

PARCEL II
PARKING SCHEDULE
17 TOTAL SPACES

NOTES ON TITLE REPORT
SCHEDULE B - SECTION 2 EXCEPTIONS

1. ITEM NUMBER 1 - THIS PROPERTY MAY BE SUBJECT TO AN AGREEMENT GRANTING THE RIGHT OF OTHERS TO USE THE ALLEY AS RECORDED IN DB.123A PG.9.

2. ITEM NUMBER 3 - THIS PROPERTY IS SUBJECT TO A PARTY WALL AGREEMENT RECORDED IN DB.686B PG.514 AND RERECORDED IN DB.686C PG.434.

3. ITEM NUMBER 5 - THIS PROPERTY IS SUBJECT TO A MEMORANDUM OF LEASE AS RECORDED IN INSTRUMENT No. 98-17830 (PARCEL I OF SUBJECT DEED).

ALTA/ACSM LAND TITLE SURVEY OF THREE PARCELS OF LAND CONTAINING 0.726 ACRES AND LOCATED AT THE CORNER OF MAIN STREET, 8TH STREET & CARY STREET

CITY OF RICHMOND, VIRGINIA

OCTOBER 17, 2007 SHEET 1 OF 2 SCALE: 1" = 20'

YOUNGBLOOD, TYLER & ASSOCIATES, P.C.
CIVIL ENGINEERS, PLANNERS
& LAND SURVEYORS
7309 HANOVER GREEN DRIVE
P.O. BOX 517 MECHANICSVILLE, Va. 23111

JOB No. 16,260, 16,297, 17037
CAD FILE: 17037

SURVEYOR'S CERTIFICATE

I KEITH A. SHRADER, A REGISTERED LAND SURVEYOR, LICENSE No. 2070, IN AND FOR THE STATE OF VIRGINIA AND LEGALLY DOING BUSINESS IN HANOVER COUNTY, DOES HEREBY CERTIFY TO EIGHTH & MAIN L.P., A DELAWARE LIMITED PARTNERSHIP AND THEIR RESPECTIVE SUCCESSORS AND/OR ASSIGNS AND CHICAGO TITLE INSURANCE COMPANY:

1. THE ACCOMPANYING SURVEY ("ALTA /ACSM LAND TITLE SURVEY OF THREE PARCELS OF LAND CONTAINING 0.726 ACRES OF LAND AND LOCATED AT THE CORNER OF MAIN STREET, 8TH STREET & CARY STREET CITY OF RICHMOND, VIRGINIA)" REPRESENTS A TRUE AND CORRECT SURVEY MADE BY ME ON OCTOBER 10, 2007 OF THE LAND THEREIN PARTICULARLY DESCRIBED.

2. THE SURVEY AND THE INFORMATION, COURSES AND DISTANCES SHOWN HEREON ARE CORRECT.

3. THE AREA OF THE SUBJECT PROPERTY AND THE SIZE, LOCATION AND TYPE OF BUILDINGS AND IMPROVEMENTS AND ANY OTHER MATTERS SITUATED ON THE SUBJECT PROPERTY ARE AS SHOWN. BUILDING DIMENSIONS SHOWN ARE THOSE THAT WERE ACCESSIBLE AND VERIFIABLE AT THE TIME OF THE SURVEY.

4. THERE ARE NO EASEMENTS OR USES AFFECTING THIS PROPERTY APPEARING FROM A CAREFUL PHYSICAL INSPECTION OF THE SAME, OTHER THAN THOSE SHOWN AND DEPICTED ON THE SURVEY.

5. THERE ARE NO ENCROACHMENTS ON THE ADJOINING PROPERTIES, STREETS, OR ALLEYS BY ANY OF SAID BUILDINGS, STRUCTURES AND IMPROVEMENTS, OTHER THAN AS SHOWN ON THE SURVEY.

6. THERE ARE NO PARTY WALLS OR VISIBLE ENCROACHMENTS ON SAID DESCRIBED PROPERTY BY STREETS, ALLEYS, OR BUILDINGS, STRUCTURES OR OTHER IMPROVEMENTS SITUATED ON ADJOINING PROPERTY, EXCEPT AS SHOWN ON THE SURVEY.

7. THE SUBJECT PROPERTY DOES NOT LIE WITHIN A SPECIAL FLOOD HAZARD AREA ("SFHA") AS DEFINED BY THE FEDERAL EMERGENCY MANAGEMENT AGENCY; THE SUBJECT PROPERTY SHOWN HEREON APPEARS TO BE LOCATED IN ZONE 'C' (AREAS OF MINIMAL FLOODING) AS GRAPHICALLY SHOWN ON THE FLOOD INSURANCE RATE MAP COMMUNITY PANEL NUMBER 510129 0010 B EFFECTIVE DATE JUNE 15, 1979. THIS SURVEYOR MAKES NO GUARANTEES AS TO THE ACCURACY OF THE ABOVE INFORMATION. THE LOCAL F.E.M.A. AGENT SHOULD BE CONTACTED FOR VERIFICATION.

8. THE SUBJECT PROPERTY HAS ACCESS TO AND FROM A DULY DEDICATED AND ACCEPTED PUBLIC STREET AS SHOWN ON THIS SURVEY.

9. SEE SHEET 1 FOR PARKING SPACE SCHEDULE.

10. OVERHEAD TELEPHONE & UNDERGROUND POWER.

11. THE UNDERSIGNED HAS RECEIVED AND EXAMINED A COPY OF CHICAGO TITLE INSURANCE COMPANY'S TITLE COMMITMENT No. 277300476 REFERENCE No. 120706546; AND THE LOCATION OF ANY MATTER SHOWN THEREON, TO THE EXTENT IT CAN BE LOCATED, HAS BEEN SHOWN ON THIS SURVEY WITH THE APPROPRIATE RECORDING REFERENCE.

THIS IS TO CERTIFY THAT THIS MAP OR PLAT AND THE SURVEY ON WHICH IT IS BASED WERE MADE IN ACCORDANCE WITH LAWS REGULATING SURVEYING IN THE STATE OF VIRGINIA, AND WITH THE "MINIMUM STANDARD DETAIL REQUIREMENTS FOR ALTA/ACSM LAND TITLE SURVEYS", JOINTLY ESTABLISHED AND ADOPTED BY ALTA AND NSPS IN 2005 AND INCLUDES ITEMS 1, 2, 3, 4, 7(a), 8, 9, 10, 11(A), 13, 14, 16 & 17 IN TABLE A CONTAINED THEREIN. PURSUANT TO THE ACCURACY STANDARDS AS ADOPTED BY ALTA AND NSPS AND IN EFFECT ON THE DATE OF THIS CERTIFICATION, UNDERSIGNED FURTHER CERTIFIES THAT IN MY PROFESSIONAL OPINION, AS A LAND SURVEYOR REGISTERED IN THE STATE OF VIRGINIA, THE RELATIVE POSITIONAL ACCURACY OF THIS SURVEY DOES NOT EXCEED THAT WHICH IS SPECIFIED HEREIN.

KEITH A. SHRADER L.S.

REGISTERED NUMBER: 2070
DATE: 10/18/07

LEGAL DESCRIPTIONS

PARCEL 1

BEGINNING AT A POINT MARKING THE INTERSECTION OF THE SOUTHERN LINE OF MAIN STREET WITH THE WESTERN LINE OF EIGHTH STREET AND RUNNING ALONG EIGHTH STREET SOUTH 37 DEGREES, 02' 00" WEST, A DISTANCE OF 234.33 FEET TO A LEAD PLUG IN THE NORTHERN LINE OF A 15 FOOT ALLEY IN COMMON; THENCE, ALONG THE NORTHERN LINE OF SAID 15 FOOT ALLEY NORTH 53 DEGREES 14' 30" WEST, A DISTANCE OF 64.08 FEET TO A ROD; THENCE, NORTH 36 DEGREES 52' 40" EAST, A DISTANCE OF 75.22 FEET TO A POINT; THENCE, NORTH 53 DEGREES 26' 20" WEST, A DISTANCE OF 66.74 FEET TO A P/K NAIL; THENCE NORTH 37 DEGREES 49' 30" EAST, A DISTANCE OF 49.45 FEET TO A POINT; THENCE, NORTH 36 DEGREES 33' 30" EAST, A DISTANCE OF 110.00 FEET TO A POINT ON THE SOUTHERN LINE OF MAIN STREET; THENCE, ALONG THE SOUTHERN LINE OF MAIN STREET SOUTH 53 DEGREES 11' 50" EAST, A DISTANCE OF 131.25 FEET TO THE POINT AND PLACE OF BEGINNING.

PARCEL II

BEGINNING AT A POINT OF INTERSECTION OF THE WESTERN LINE OF EIGHTH STREET AND THE NORTHERN LINE OF CARY STREET; THENCE, FROM SAID POINT OF BEGINNING AND CONTINUING ALONG THE NORTHERN LINE OF CARY STREET NORTH 53 DEGREES 12' 00" WEST, 63.92 FEET TO A POINT; THENCE, LEAVING THE NORTHERN LINE OF CARY STREET NORTH 36 DEGREES 56' 06" EAST, 78.00 FEET TO A POINT ON THE SOUTHERN LINE OF A 15 FOOT ALLEY IN COMMON; THENCE, CONTINUING ALONG THE SOUTHERN LINE OF THE 15 FOOT ALLEY IN COMMON SOUTH 53 DEGREES 12' 00" EAST, 64.05 FEET TO A POINT ON THE WEST LINE OF EIGHTH STREET; THENCE, CONTINUING ALONG THE WEST LINE OF EIGHTH STREET SOUTH 37 DEGREES 02' 00" WEST, 78.00 FEET TO THE POINT AND PLACE OF BEGINNING.

ALLEY IN COMMON

BEGINNING AT A POINT ON THE WEST LINE OF 8TH STREET, SAID POINT BEING 78.00' NORTH OF THE NORTH LINE OF CARY STREET, THENCE LEAVING THE WEST LINE OF 8TH STREET N53°12'00"W, 64.05' ALONG THE SOUTH LINE OF AN ALLEY IN COMMON TO A POINT; THENCE N36°56'06"E, 14.95' TO A POINT; THENCE S53°14'30"E, 64.08' ALONG THE NORTH LINE OF AN ALLEY IN COMMON TO A POINT ON THE NORTH LINE OF 8TH STREET; THENCE CONTINUING ALONG THE NORTH LINE OF 8TH STREET S37°02'00"W, 15.00' TO THE POINT AND PLACE OF BEGINNING.

COMMONWEALTH OF VIRGINIA
KEITH A. SHRADER
Lic. No. 2070
10/18/07
LAND SURVEYOR

ALTA/ACSM LAND TITLE SURVEY OF
THREE PARCELS OF LAND CONTAINING 0.726 ACRES AND LOCATED AT THE CORNER OF MAIN STREET, 8TH STREET & CARY STREET
CITY OF RICHMOND, VIRGINIA

OCTOBER 17, 2007 SHEET 2 OF 2 SCALE: 1" = 20'

YOUNGBLOOD, TYLER & ASSOCIATES, P.C.
CIVIL ENGINEERS, PLANNERS
& LAND SURVEYORS
7309 HANOVER GREEN DRIVE
P.O. BOX 517 MECHANICSVILLE, Va. 23111

Dominion®

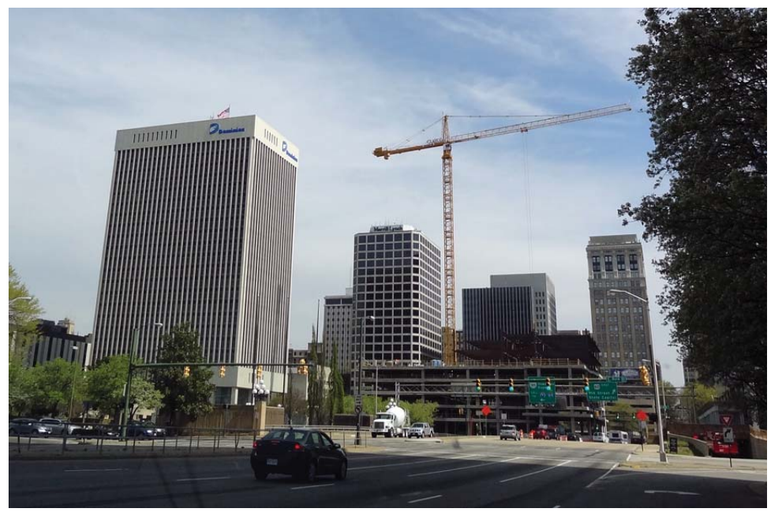

Eight & Main Building - Skyline Signage

707 East Main Street
Richmond, VA 23219

Date:	Description of Revision
04/16/14	Initial Recommendations
04/23/14	R3, R5, R6, R7 & R13 Revised

ssg.

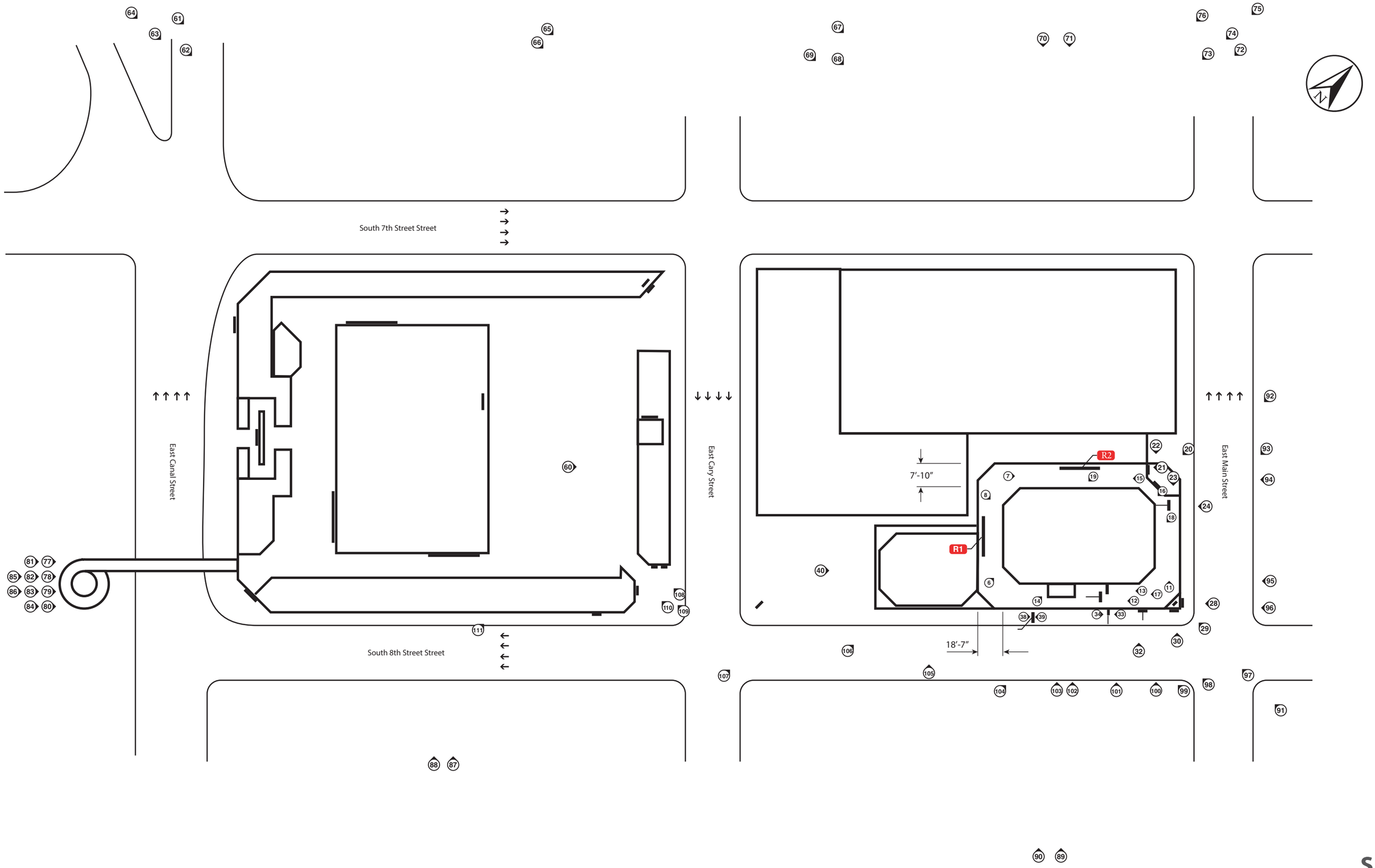
South 7th Street Street
East Canal Street
East Cary Street
East Main Street
South 8th Street Street
R1
R2
7'-10"
18'-7"

ssg.

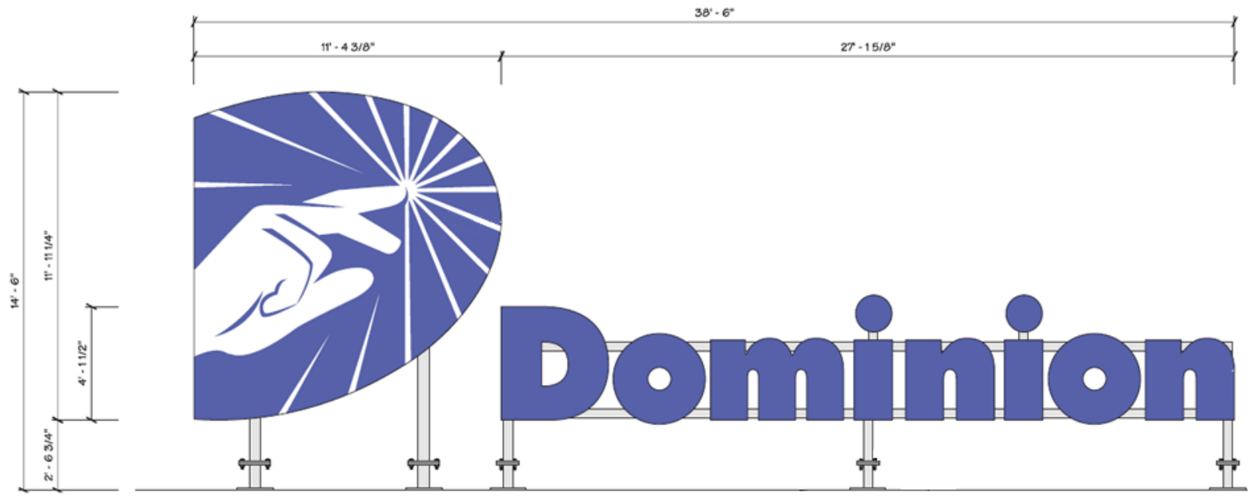

R1 **246 Sq. Ft. Skyline Building Sign (South Elevation)**

Existing Hi-Rise Building Letters - South Elevation

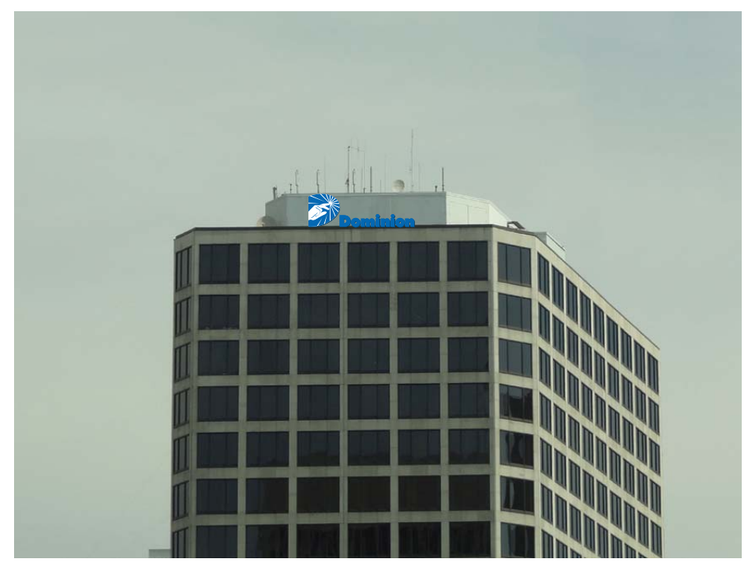

New Skyline Letters & Logo - Photoimaging - South Elevation

Dwg #: D-103

Title: Skyline Building Sign R1
South Elevation

Client: Dominion
Site: Merrill Lynch Building

Date: 04/16/2014

ssg.
302 Peachtree Street
Nashville, Tennessee
(615) 297-2371

FOR DESIGN INTENT ONLY
The sole purpose of these design intent drawings is to provide general guidance for the vendor in the development of this project. They are not intended for fabrication purposes. The vendor accepts total responsibility for materials selection, engineering,fabrication and installation.

View from James River Plaza

View from Mid-Level Floor of James River Plaza Building

FOR DESIGN INTENT ONLY

The sole purpose of these design intent drawings is to provide general guidance for the vendor in the development of this project. They are not intended for fabrication purposes. The vendor accepts total responsibility for materials selection, engineering, fabrication and installation.

ssg.

302 Peachtree Street
Nashville, Tennessee
(615) 297-2371

Date: 05/01/2014

Client: Dominion
Site: Merrill Lynch Building

Title: Skyline Building Sign R1
South Elevation

Dwg #: D-103.1

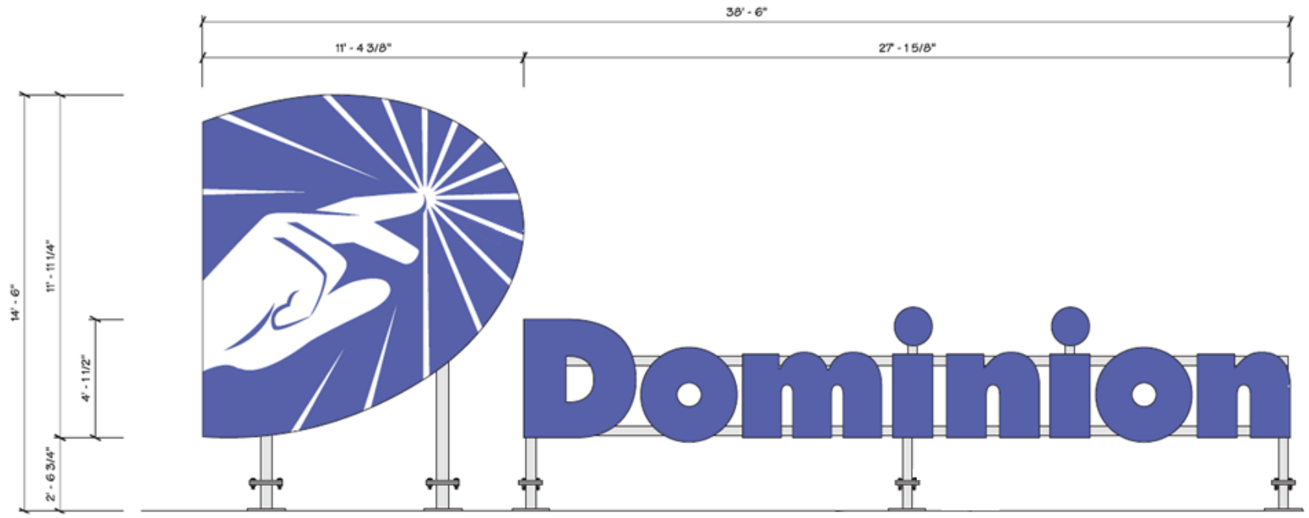

R2 246 Sq. Ft. Skyline Building Sign (West Elevation)

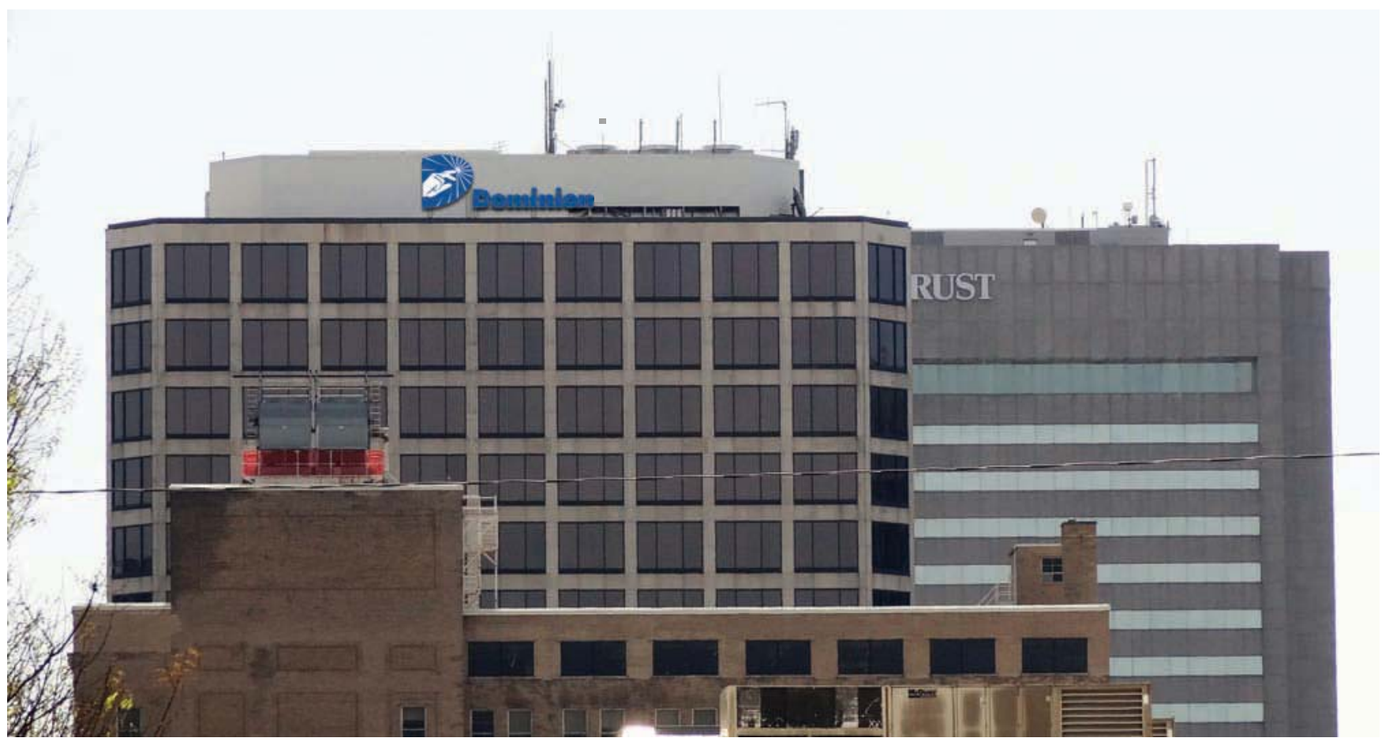

New Skyline Building Letters & Logo - Photoimaging - No Scale - West Elevation

Dwg #: D-104

Title: Skyline Building Sign R2
West Elevation

Client: Dominion
Site: Merrill Lynch Building

Date: 04/15/2014

ssg.
302 Peachtree Street
Nashville, Tennessee
(615) 297-2371

FOR DESIGN INTENT ONLY

The sole purpose of these design intent drawings is to provide general guidance for the vendor in the development of this project. They are not intended for fabrication purposes. The vendor accepts total responsibility for materials selection, engineering, fabrication and installation.

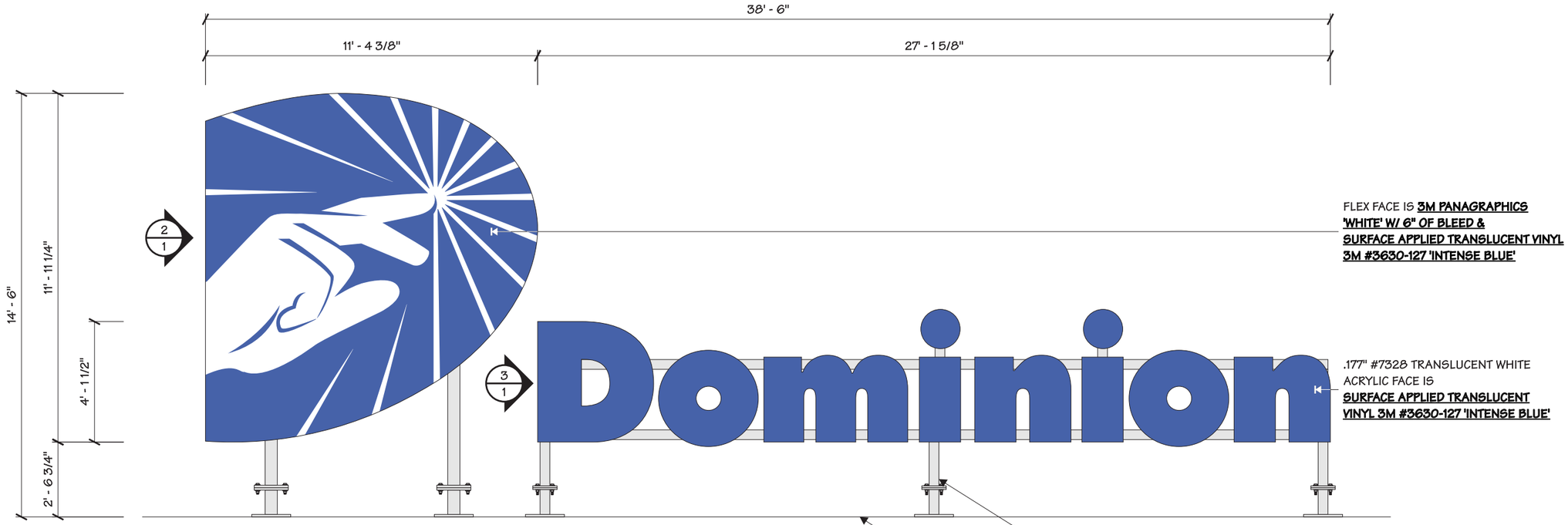

1 / 1 FRONT ELEVATION
1/4" = 1' - 0"

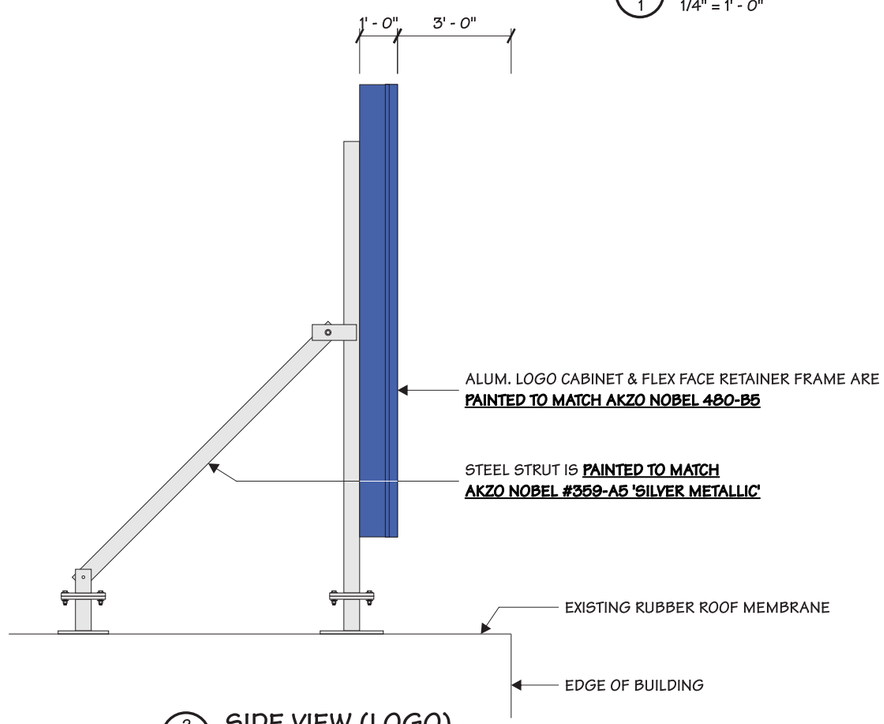

2 / 1 SIDE VIEW (LOGO)
1/4" = 1' - 0"

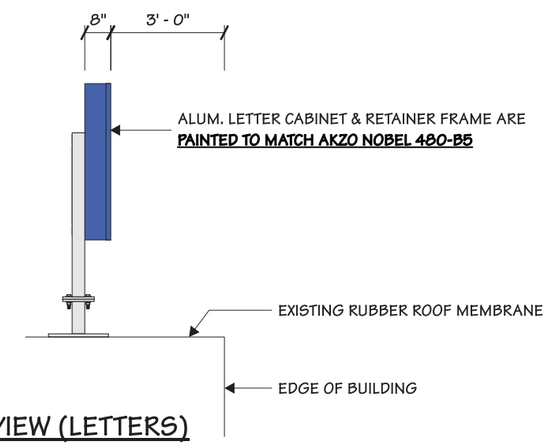

3 / 1 SIDE VIEW (LETTERS)
1/4" = 1' - 0"

Architectural Graphics Incorporated
2655 International Parkway
P.O. Box 9175
Virginia Beach, VA 23450
(757)427-1900

Project Title
Dominion

Date 07.16.14

AGI EoR J. MEYER
Lead Drafter
Drawn By SPK
Project Mgr. N. RAMSAY

General Sign Specifications

- [ ] Interior
- [x] Exterior
- [x] Single Faced
- [ ] Double Faced
- [ ] _____
- [ ] Non-Illuminated
- [x] Illuminated

_____ Volts _____ Amps(+/-)

Location RICHMOND, VA
Windload 90 MPH / IBC 2009

Drawing Revisions

Drawn By	Date	Change
A		
A		
A		
A		
A		
A		
A		
A		
A		
A		
A		

This document is the sole property of Architectural Graphics, Inc., and all design, manufacturing, reproduction, use and sale rights regarding the same are expressly forbidden. It is submitted under a confidential relationship, for a special purpose, and the recipient, by accepting this document assumes custody and agrees that this document will not be copied or reproduced in whole or in part, nor its contents revealed in any manner or to any person except for the purpose for which it was tendered, nor any special features peculiar to this design be incorporated in other projects.

Code 14297
Type C
Sign Type DOM-HR
PG #: 01

NOTES:
1.) ALL STEEL TO BE BLASTED & PRIMED

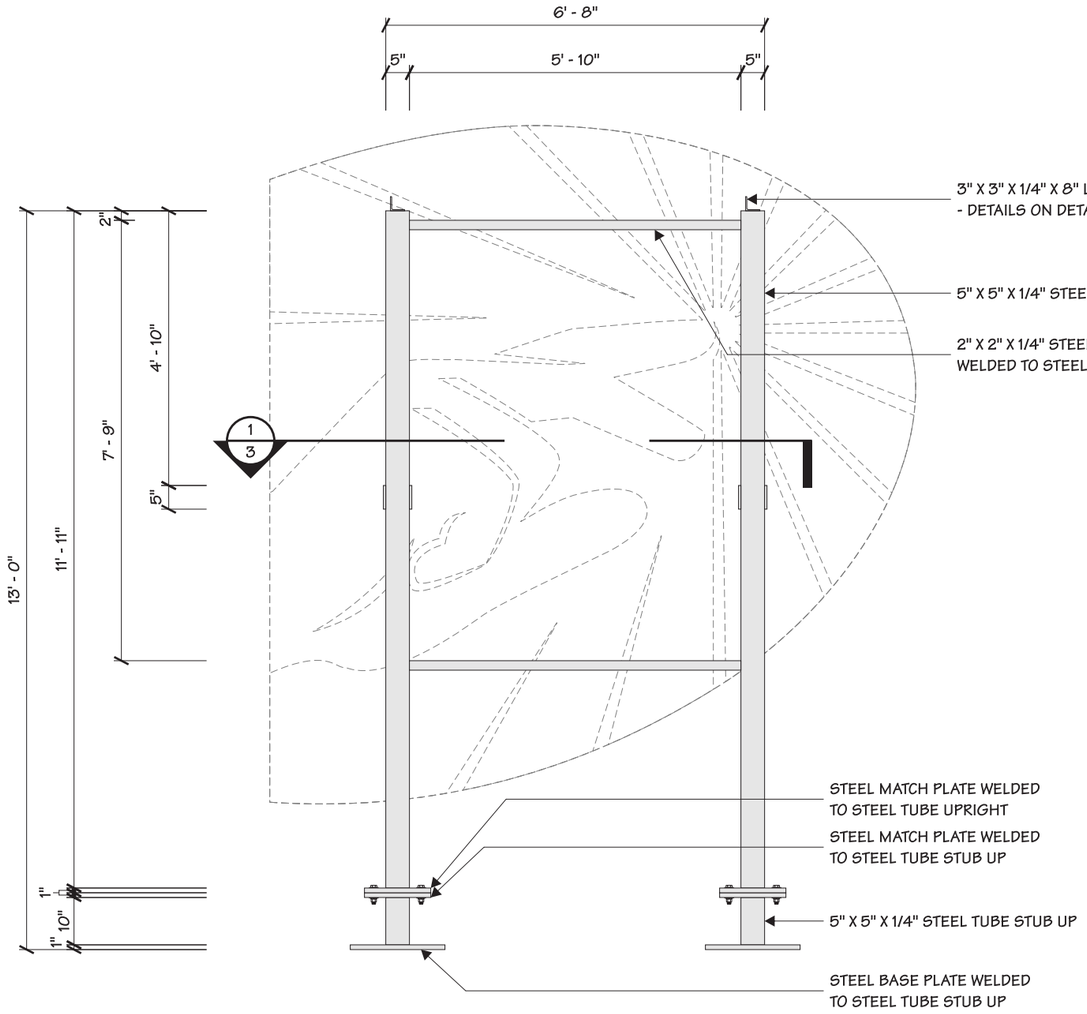

1/2 STRUCTURAL ELEVATION (LOGO FRAME)
3/8" = 1' - 0"

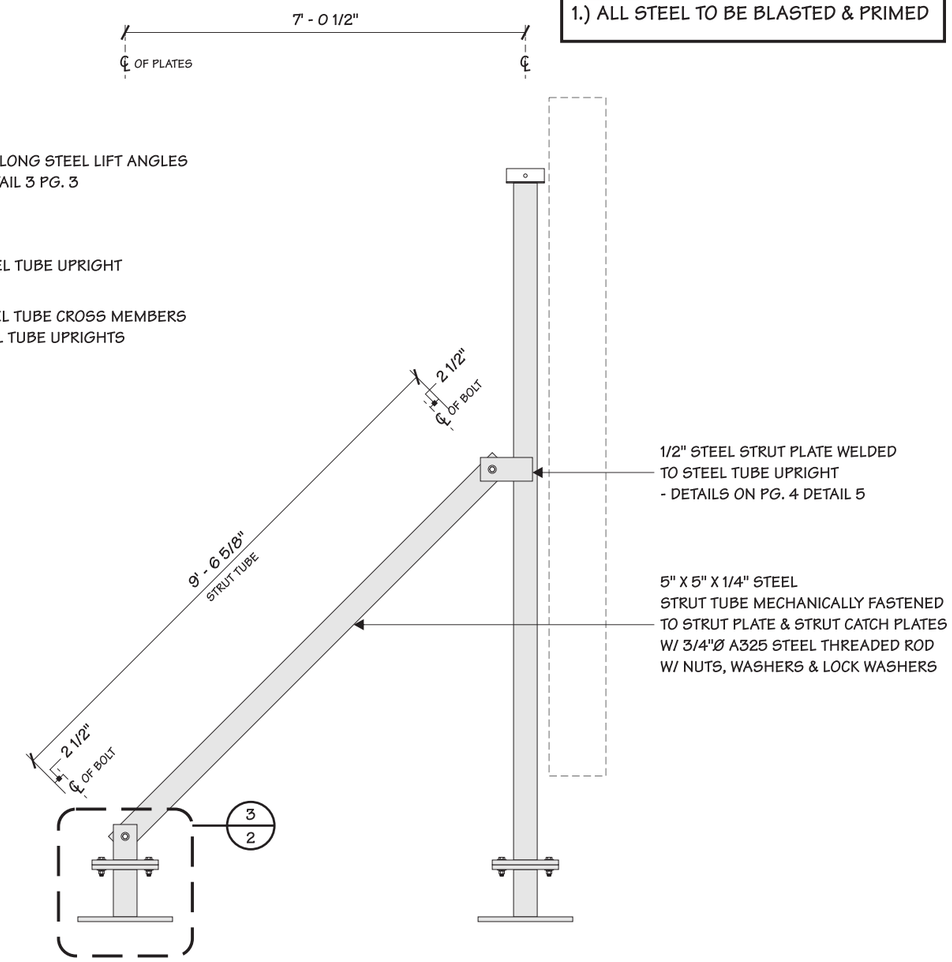

2/2 SIDE VIEW
3/8" = 1' - 0"

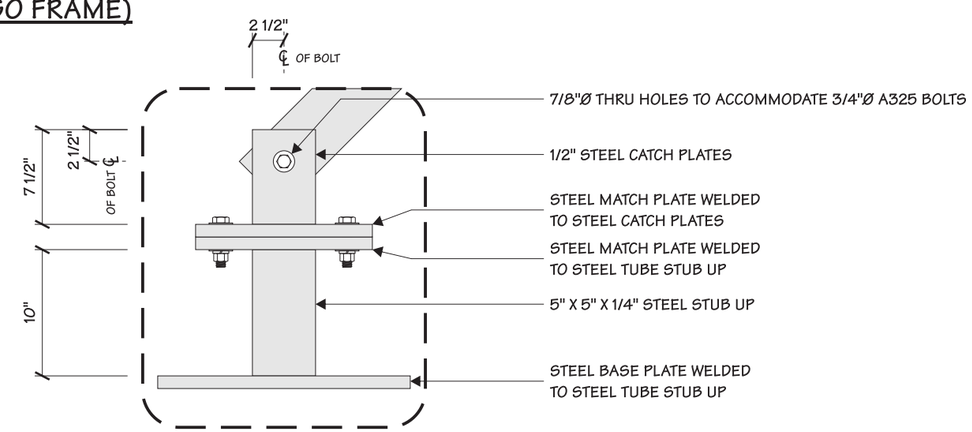

3/2 SIDE VIEW
1" = 1' - 0"

Architectural Graphics Incorporated
2655 International Parkway
P.O. Box 9175
Virginia Beach, VA 23450
(757)427-1900

Project Title
Dominion

Date 07.16.14

AGI EoR J. MEYER
Lead Drafter
Drawn By SPK
Project Mgr. N. RAMSAY

General Sign Specifications
- [ ] Interior
- [x] Exterior
- [x] Single Faced
- [ ] Double Faced
- [ ] _____
- [ ] Non-Illuminated
- [x] Illuminated

_____Volts _____Amps(+/-)
Location RICHMOND, VA
Windload 90 MPH / IBC 2009

Drawing Revisions

Drawn By	Date	Change
A		
B		
C		
D		
E		
F		
G		
H		
I		
J		

This document is the sole property of Architectural Graphics, Inc., and all design, manufacturing, reproduction, use and sale rights regarding the same are expressly forbidden. It is submitted under a confidential relationship, for a special purpose, and the recipient, by accepting this document assumes custody and agrees that this document will not be copied or reproduced in whole or in part, nor its contents revealed in any manner or to any person except for the purpose for which it was tendered, nor any special features peculiar to this design be incorporated in other projects.

Code 14297
Type C
Sign Type DOM-HR
PG #: 02

NOTES:
1.) ALL STEEL TO BE BLASTED & PRIMED

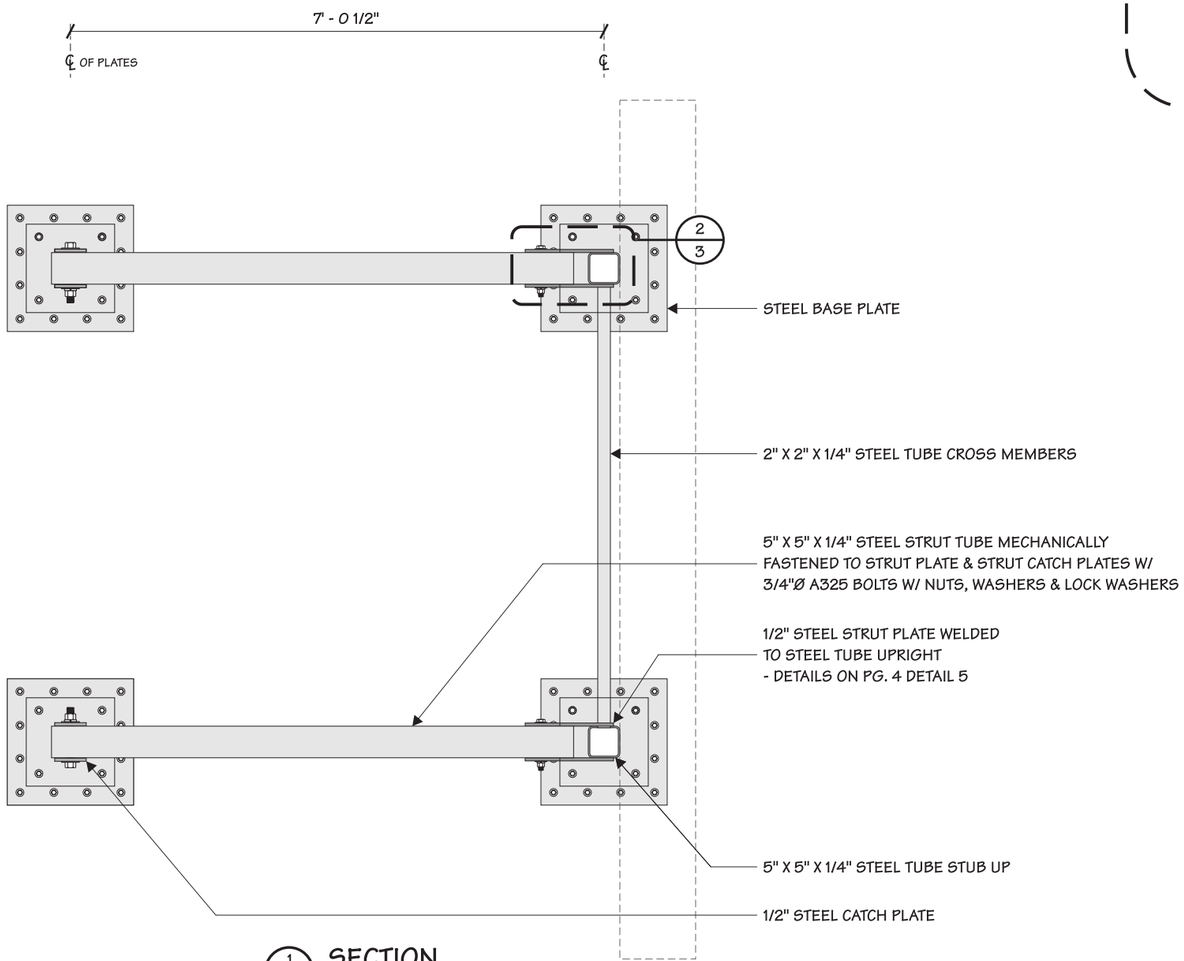

1/3 SECTION
1/2" = 1' - 0"

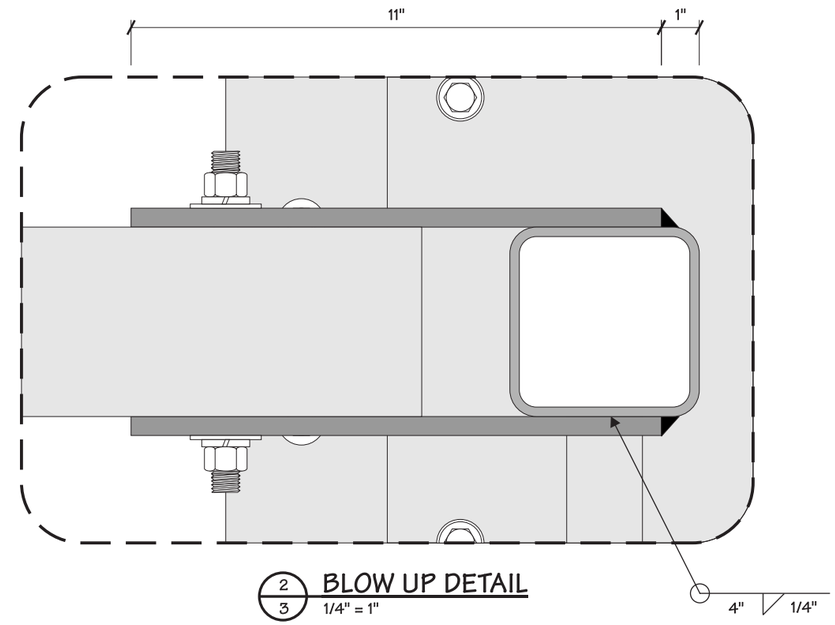

2/3 BLOW UP DETAIL
1/4" = 1"

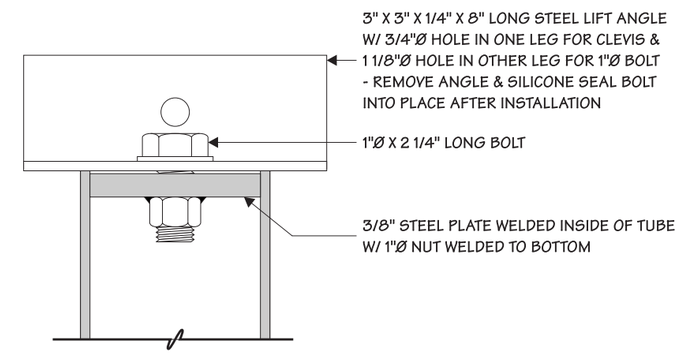

3/3 BLOW UP DETAIL
1/4" = 1"

Architectural Graphics Incorporated
2655 International Parkway
P.O. Box 9175
Virginia Beach, VA 23450
(757)427-1900

Project Title
Dominion

Date 07.16.14

AGI EoR J. MEYER
Lead Drafter
Drawn By SPK
Project Mgr. N. RAMSAY

General Sign Specifications
☐ Interior ■ Exterior
■ Single Faced ☐ Double Faced
☐ _____
☐ Non-Illuminated
■ Illuminated
_____Volts _____Amps(+/-)
Location RICHMOND, VA
Windload 90 MPH / IBC 2009

Drawing Revisions

Drawn By	Date	Change
A		
A		
A		
A		
B		
A		
A		
B		
B		
B		
A		

This document is the sole property of Architectural Graphics, Inc., and all design, manufacturing, reproduction, use and sale rights regarding the same are expressly forbidden. It is submitted under a confidential relationship, for a special purpose, and the recipient, by accepting this document assumes custody and agrees that this document will not be copied or reproduced in whole or in part, nor its contents revealed in any manner or to any person except for the purpose for which it was tendered, nor any special features peculiar to this design be incorporated in other projects.

Code 14297
Type C
Sign Type DOM-HR
PG #: 03

NOTES:
1.) ALL STEEL TO BE BLASTED & PRIMED

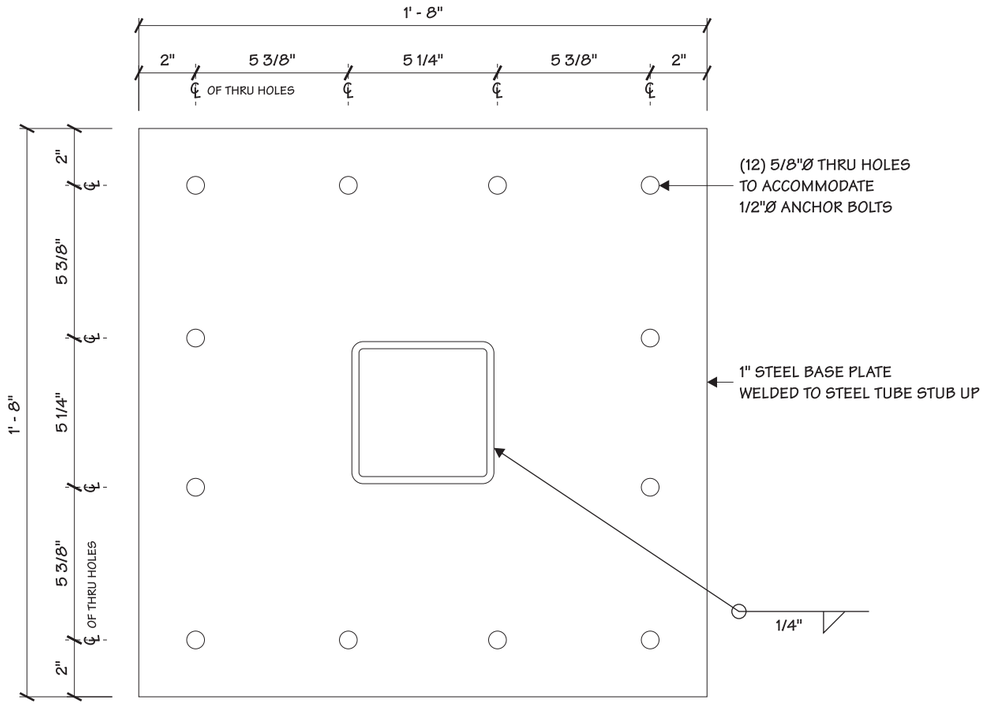

1/4 BASE PLATE DETAILS (LOGO)
3/16" = 1"

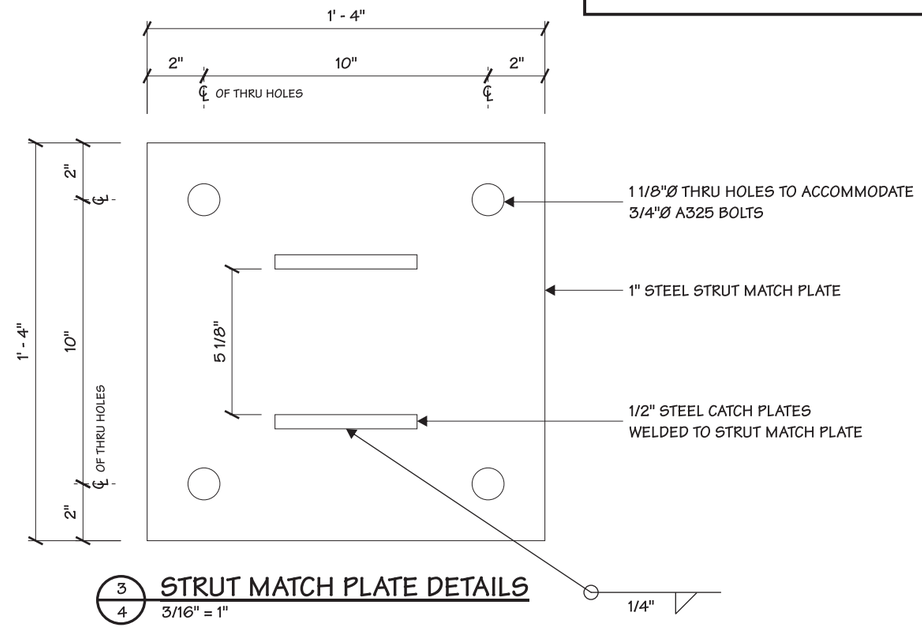

3/4 STRUT MATCH PLATE DETAILS
3/16" = 1"

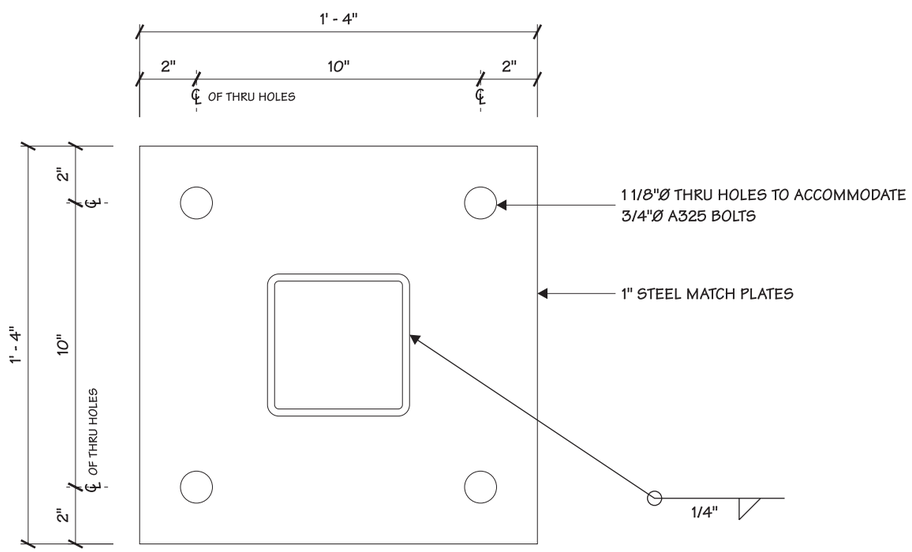

2/4 MATCH PLATE DETAILS (LOGO)
3/16" = 1"

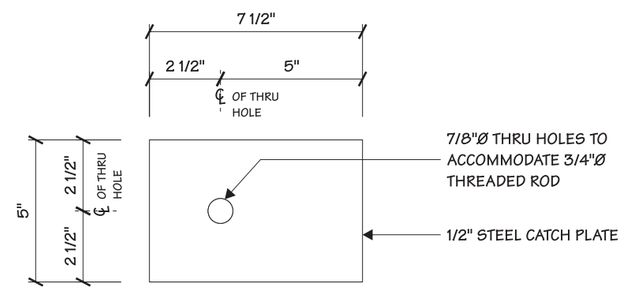

4/4 CATCH PLATE DETAILS (BOTTOM OF STRUT)
3/16" = 1"

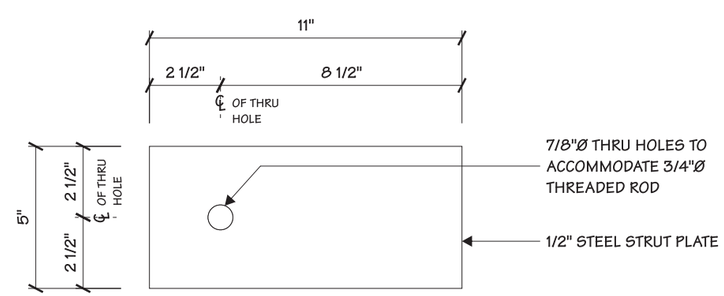

5/4 STRUT PLATE DETAILS (TOP OF STRUT)
3/16" = 1"

Architectural Graphics Incorporated
2655 International Parkway
P.O. Box 9175
Virginia Beach, VA 23450
(757)427-1900

Project Title: Dominion

Date 07.16.14

AGI EoR J. MEYER
Lead Drafter
Drawn By SPK
Project Mgr. N. RAMSAY

General Sign Specifications
- ☐ Interior ■ Exterior
- ■ Single Faced ☐ Double Faced
- ☐ _____
- ☐ Non-Illuminated
- ■ Illuminated
- _____ Volts _____ Amps(+/-)

Location RICHMOND, VA
Windload 90 MPH / IBC 2009

Drawing Revisions

Drawn By	Date	Change
A		
B		
C		
D		
E		
F		
G		
H		
I		
J		

This document is the sole property of Architectural Graphics, Inc., and all design, manufacturing, reproduction, use and sale rights regarding the same are expressly forbidden. It is submitted under a confidential relationship, for a special purpose, and the recipient, by accepting this document assumes custody and agrees that this document will not be copied or reproduced in whole or in part, nor its contents revealed in any manner or to any person except for the purpose for which it was tendered, nor any special features peculiar to this design be incorporated in other projects.

Code 14297
Type C
Sign Type DOM-HR
PG #: 04

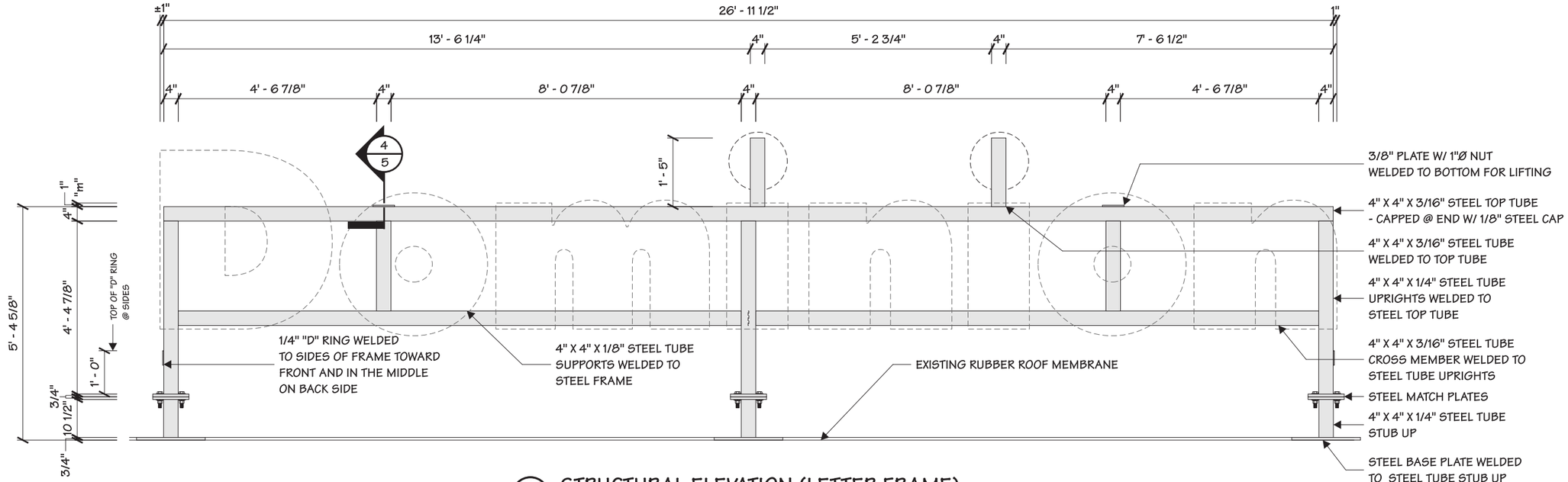

1/5 STRUCTURAL ELEVATION (LETTER FRAME)

3/8" = 1' - 0"

NOTES:
1.) LETTERS TO BE INSTALLED ONTO STEEL STRUCTURE W/ 1" MIN. OVERHANG
2.) ALL STEEL TO BE BLASTED & PRIMED

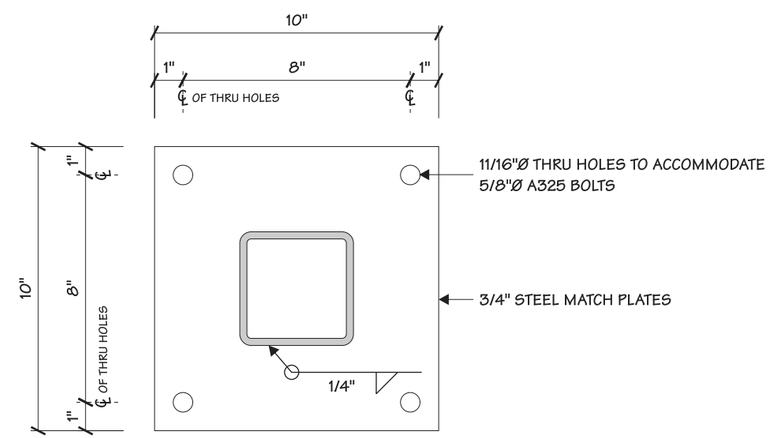

3/5 MATCH PLATE DETAILS (LETTER FRAME)

3/16" = 1"

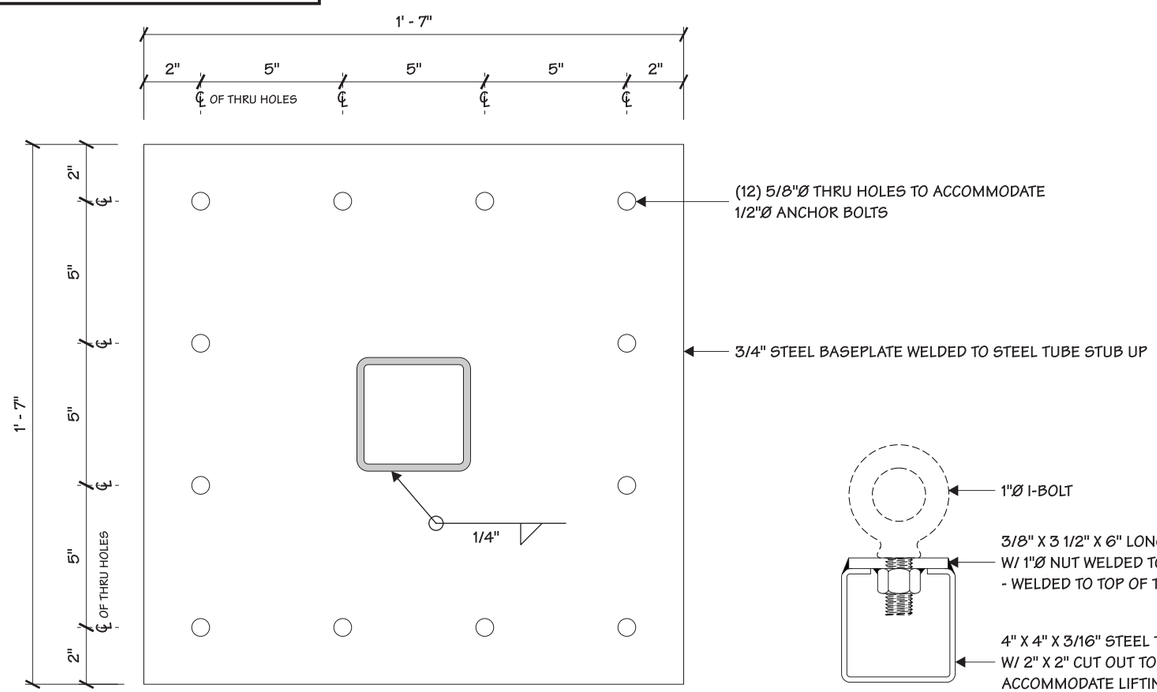

2/5 BASE PLATE DETAILS (LETTER FRAME)

3/16" = 1"

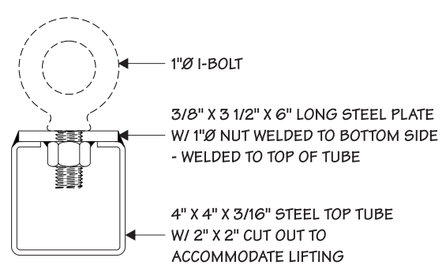

4/5 LIFTING DETAIL

3/16" = 1"

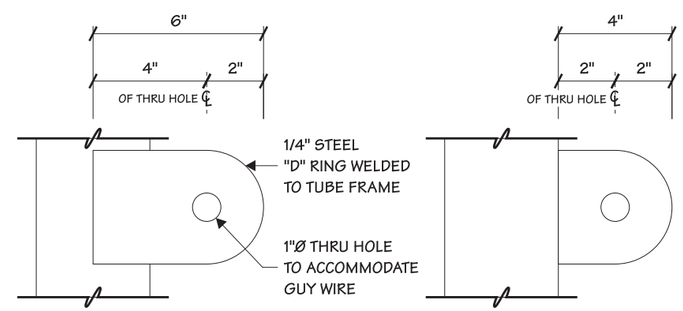

5/5 "D" RING (ENDS)

3/16" = 1"

6/5 "D" RING (BACK)

3/16" = 1"

Architectural Graphics Incorporated
2655 International Parkway
P.O. Box 9175
Virginia Beach, VA 23450
(757)427-1900

Project Title: Dominion

Date 07.16.14

AGI EoR J. MEYER
Lead Drafter
Drawn By SPK
Project Mgr. N. RAMSAY

General Sign Specifications
- ☐ Interior ■ Exterior
- ■ Single Faced ☐ Double Faced
- ☐ _____
- ☐ Non-Illuminated
- ■ Illuminated
- _____ Volts _____ Amps(+/-)

Location RICHMOND, VA
Windload 90 MPH / IBC 2009

Drawing Revisions		
Drawn By	Date	Change
A		
A		
A		
A		
B		
A		
A		
B		
B		
B		
A		

This document is the sole property of Architectural Graphics, Inc., and all design, manufacturing, reproduction, use and sale rights regarding the same are expressly forbidden. It is submitted under a confidential relationship, for a special purpose, and the recipient, by accepting this document assumes custody and agrees that this document will not be copied or reproduced in whole or in part, nor its contents revealed in any manner or to any person except for the purpose for which it was tendered, nor any special features peculiar to this design be incorporated in other projects.

Code	Type
14297	C

Sign Type	PG #:
DOM-HR	05

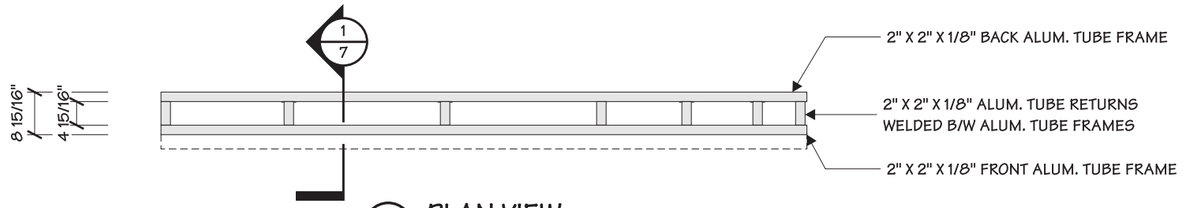

1/6 PLAN VIEW
3/8" = 1' - 0"

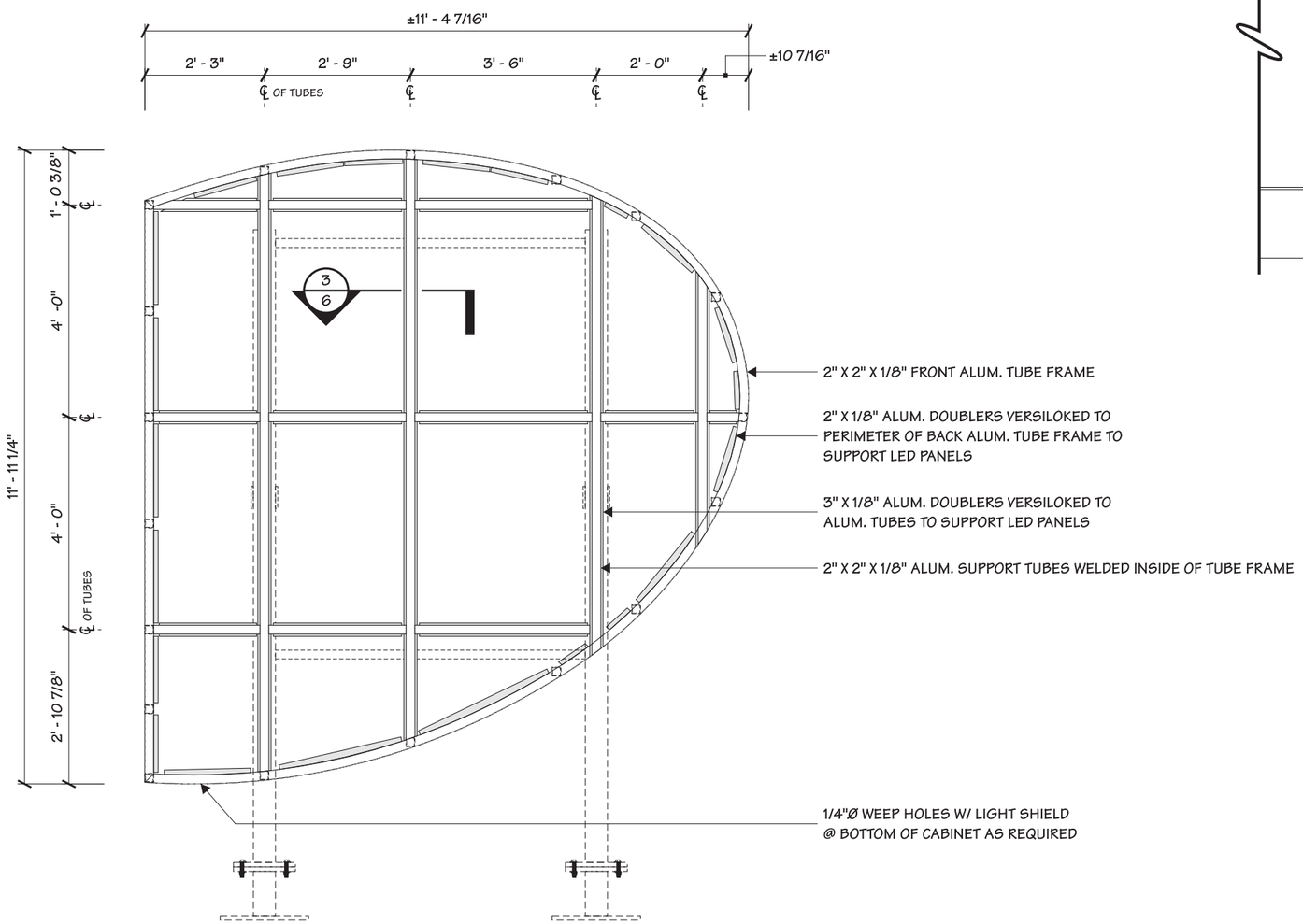

2/6 STRUCTURAL ELEVATION (LOGO CABINET)
3/8" = 1' - 0"

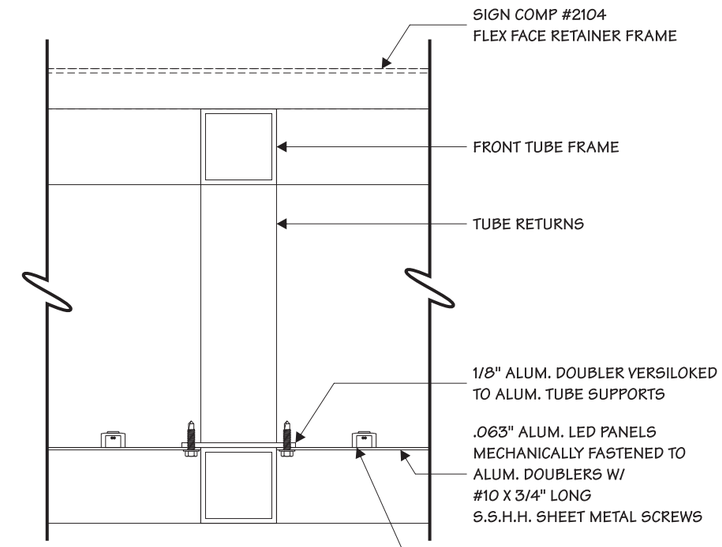

3/6 SECTION
1/4" = 1"

Architectural Graphics Incorporated
2655 International Parkway
P.O. Box 9175
Virginia Beach, VA 23450
(757)427-1900

Project Title
Dominion

Date 07.16.14

AGI EoR J. MEYER
Lead Drafter
Drawn By SPK
Project Mgr. N. RAMSAY

General Sign Specifications
- ☐ Interior ■ Exterior
- ■ Single Faced ☐ Double Faced
- ☐ _____
- ☐ Non-Illuminated
- ■ Illuminated

_____Volts _____Amps(+/-)
Location RICHMOND, VA
Windload 90 MPH / IBC 2009

Drawing Revisions

Drawn By	Date	Change
A		
A		
A		
A		
A		
A		
A		
A		
A		
A		
A		

This document is the sole property of Architectural Graphics, Inc., and all design, manufacturing, reproduction, use and sale rights regarding the same are expressly forbidden. It is submitted under a confidential relationship, for a special purpose, and the recipient, by accepting this document assumes custody and agrees that this document will not be copied or reproduced in whole or in part, nor its contents revealed in any manner or to any person except for the purpose for which it was tendered, nor any special features peculiar to this design be incorporated in other projects.

Code 14297
Type C
Sign Type DOM-HR
PG #: 06

NOTES:
1.) CLIENT TO VERIFY POWER SUPPLY 120V OR 277V

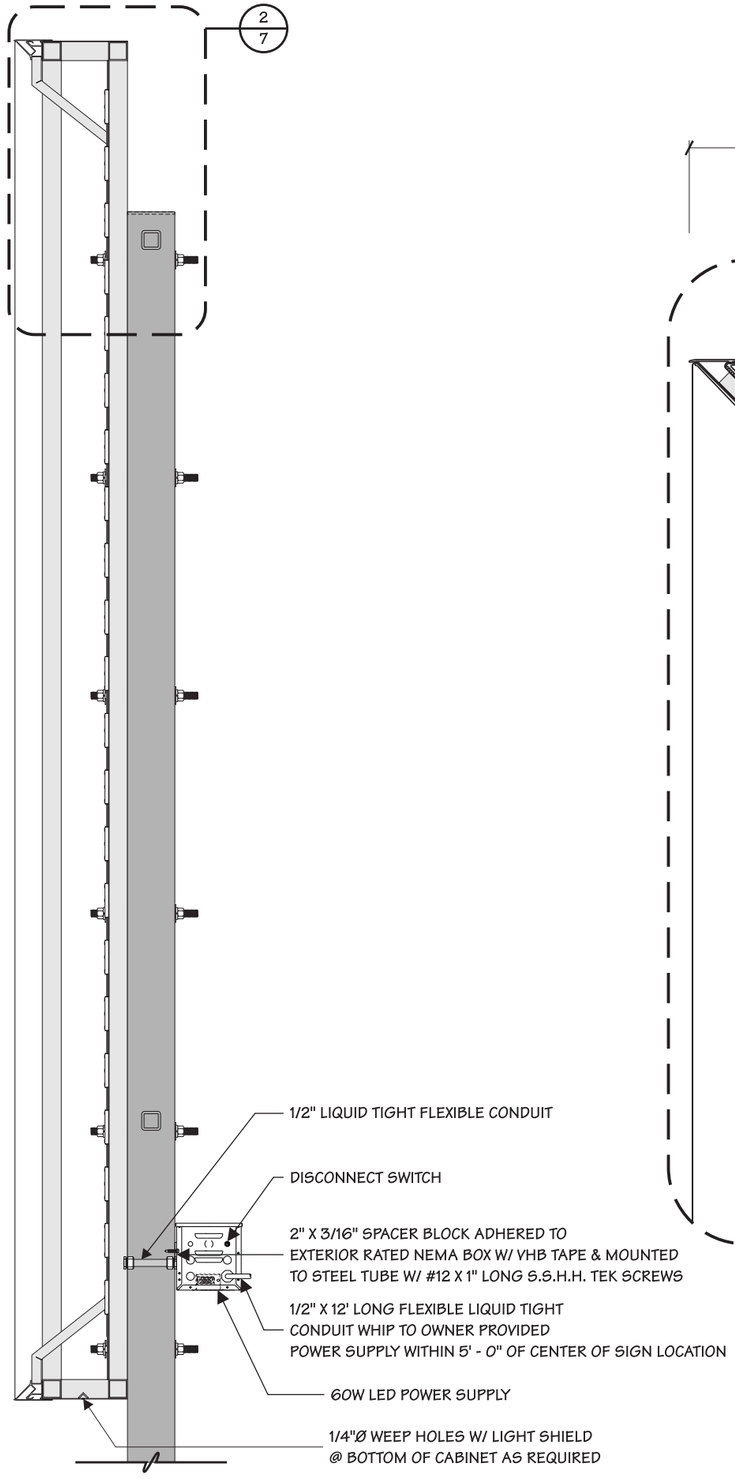

1/7 SECTION
3/4" = 1' - 0"

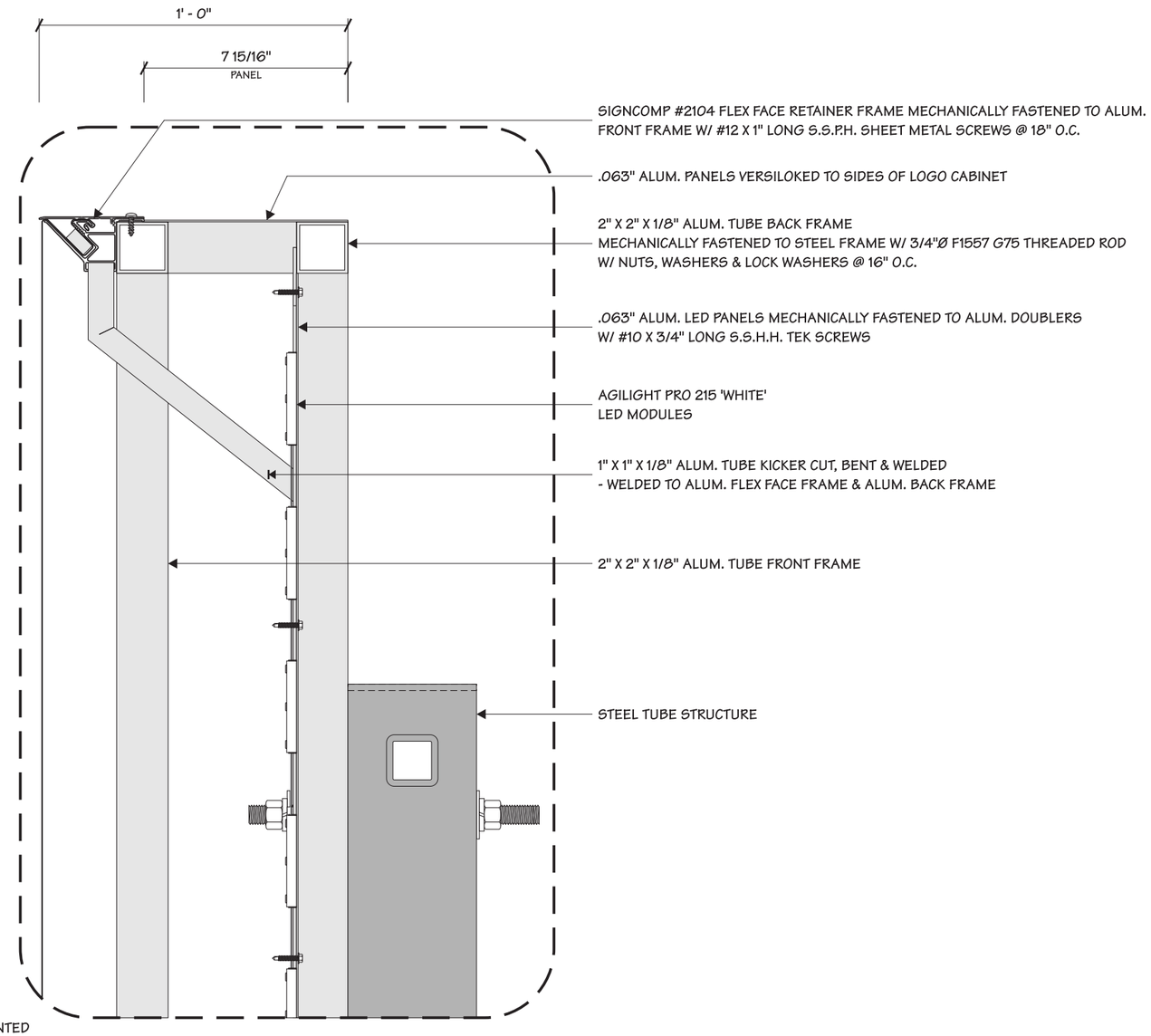

2/7 SECTION
1/4" = 1"

Architectural Graphics Incorporated
2655 International Parkway
P.O. Box 9175
Virginia Beach, VA 23450
(757)427-1900

Project Title
Dominion

Date 07.16.14

AGI EoR J. MEYER
Lead Drafter
Drawn By SPK
Project Mgr. N. RAMSAY

General Sign Specifications
- [ ] Interior
- [x] Exterior
- [x] Single Faced
- [ ] Double Faced
- [ ] _____
- [ ] Non-Illuminated
- [x] Illuminated

_____Volts _____Amps(+/-)
Location RICHMOND, VA
Windload 90 MPH / IBC 2009

Drawing Revisions

Drawn By	Date	Change
A		
B		
C		
D		
E		
F		
G		
H		
I		
J		
K		

This document is the sole property of Architectural Graphics, Inc., and all design, manufacturing, reproduction, use and sale rights regarding the same are expressly forbidden. It is submitted under a confidential relationship, for a special purpose, and the recipient, by accepting this document assumes custody and agrees that this document will not be copied or reproduced in whole or in part, nor its contents revealed in any manner or to any person except for the purpose for which it was tendered, nor any special features peculiar to this design be incorporated in other projects.

Code 14297
Type C
Sign Type DOM-HR
PG #: 07

NOTES:
1.) CLIENT TO VERIFY POWER SUPPLY 120V OR 277V

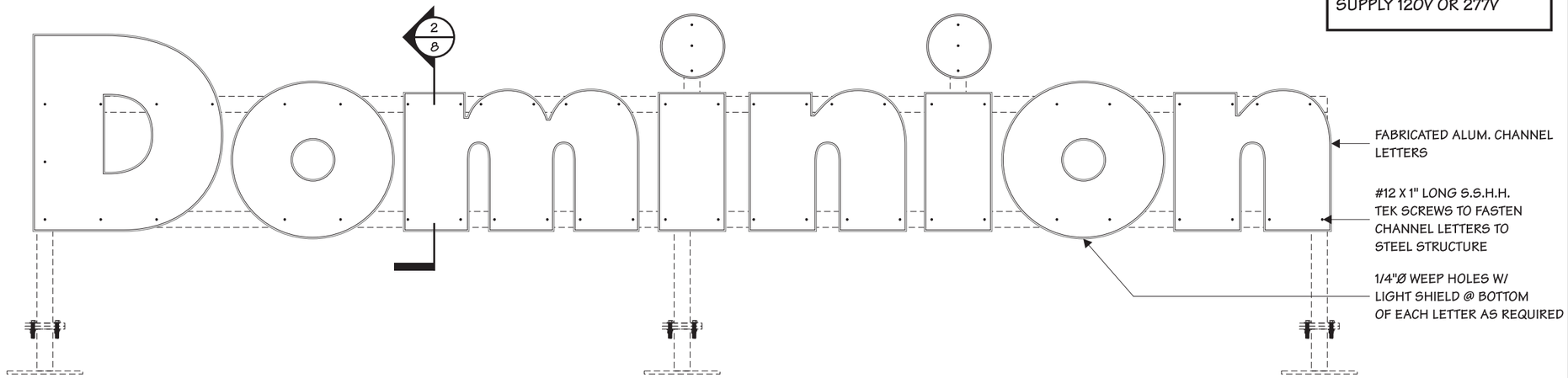

1/8 LETTER DETAILS
3/8" = 1' - 0"

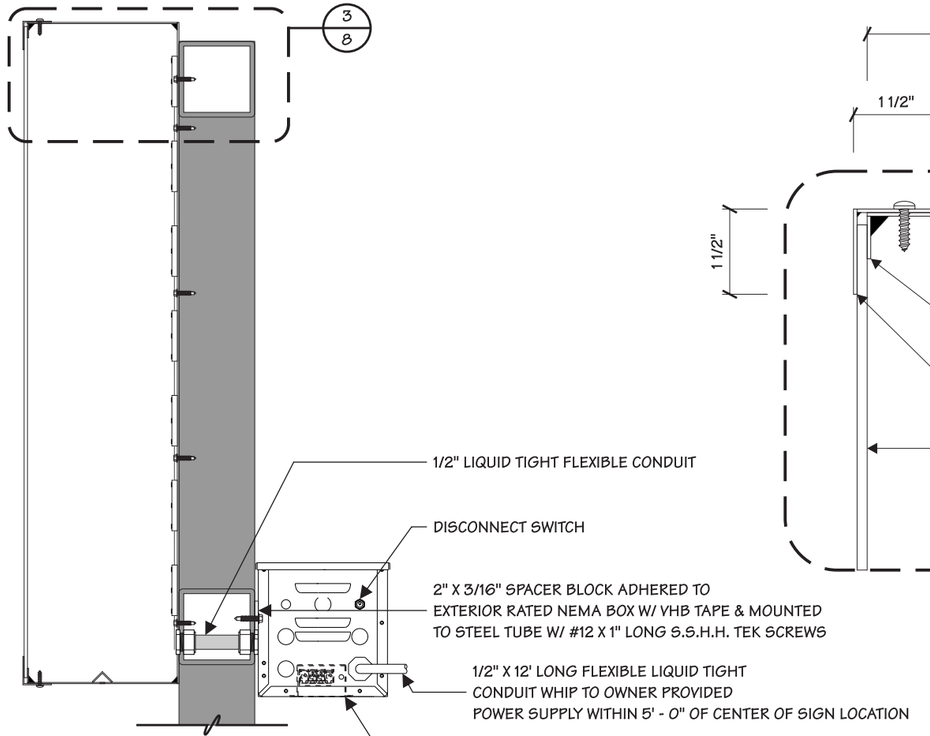

2/8 SECTION
1/8" = 1"

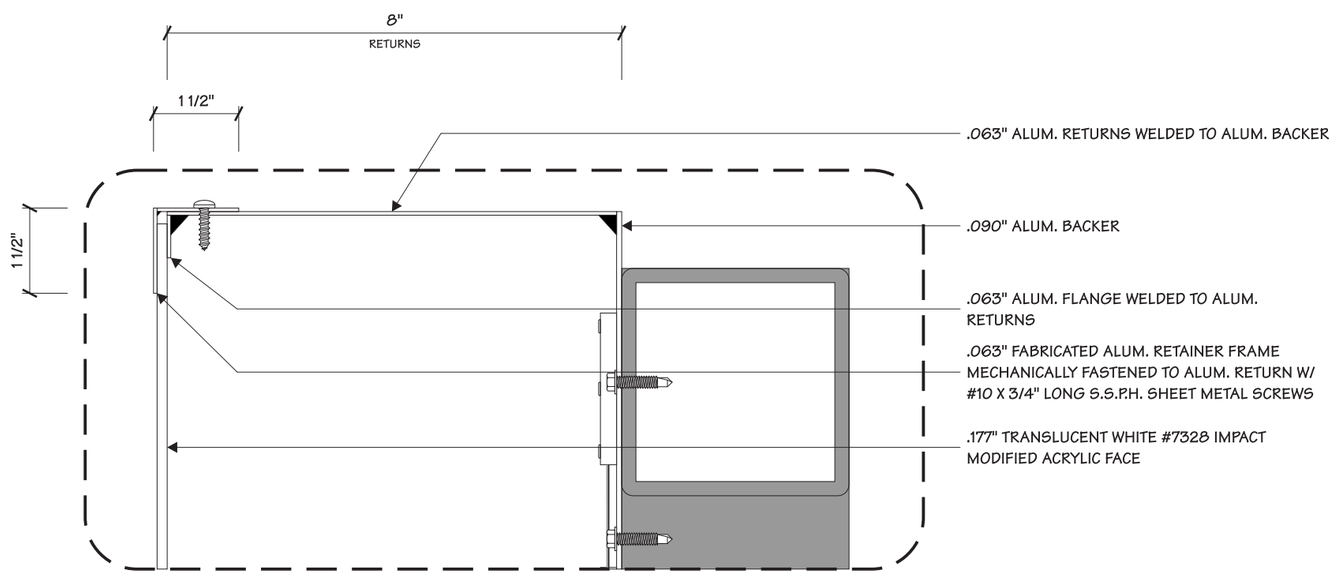

3/8 BLOW UP DETAIL
3/8" = 1"

Architectural Graphics Incorporated
2655 International Parkway
P.O. Box 9175
Virginia Beach, VA 23450
(757)427-1900

Project Title: Dominion

Date 07.16.14

AGI EoR J. MEYER
Lead Drafter
Drawn By SPK
Project Mgr. N. RAMSAY

General Sign Specifications
- ☐ Interior ■ Exterior
- ■ Single Faced ☐ Double Faced
- ☐ _____
- ☐ Non-Illuminated
- ■ Illuminated
- _____Volts _____Amps(+/-)

Location RICHMOND, VA
Windload 90 MPH / IBC 2009

Drawing Revisions		
Drawn By	Date	Change

This document is the sole property of Architectural Graphics, Inc., and all design, manufacturing, reproduction, use and sale rights regarding the same are expressly forbidden. It is submitted under a confidential relationship, for a special purpose, and the recipient, by accepting this document assumes custody and agrees that this document will not be copied or reproduced in whole or in part, nor its contents revealed in any manner or to any person except for the purpose for which it was tendered, nor any special features peculiar to this design be incorporated in other projects.

Code	Type
14297	C

Sign Type	PG #:
DOM-HR	08

NOTES:
1.) CLEAR OUT DEBRIS FROM DRILLED HOLES PRIOR TO INSTALLATION OF ANCHORS

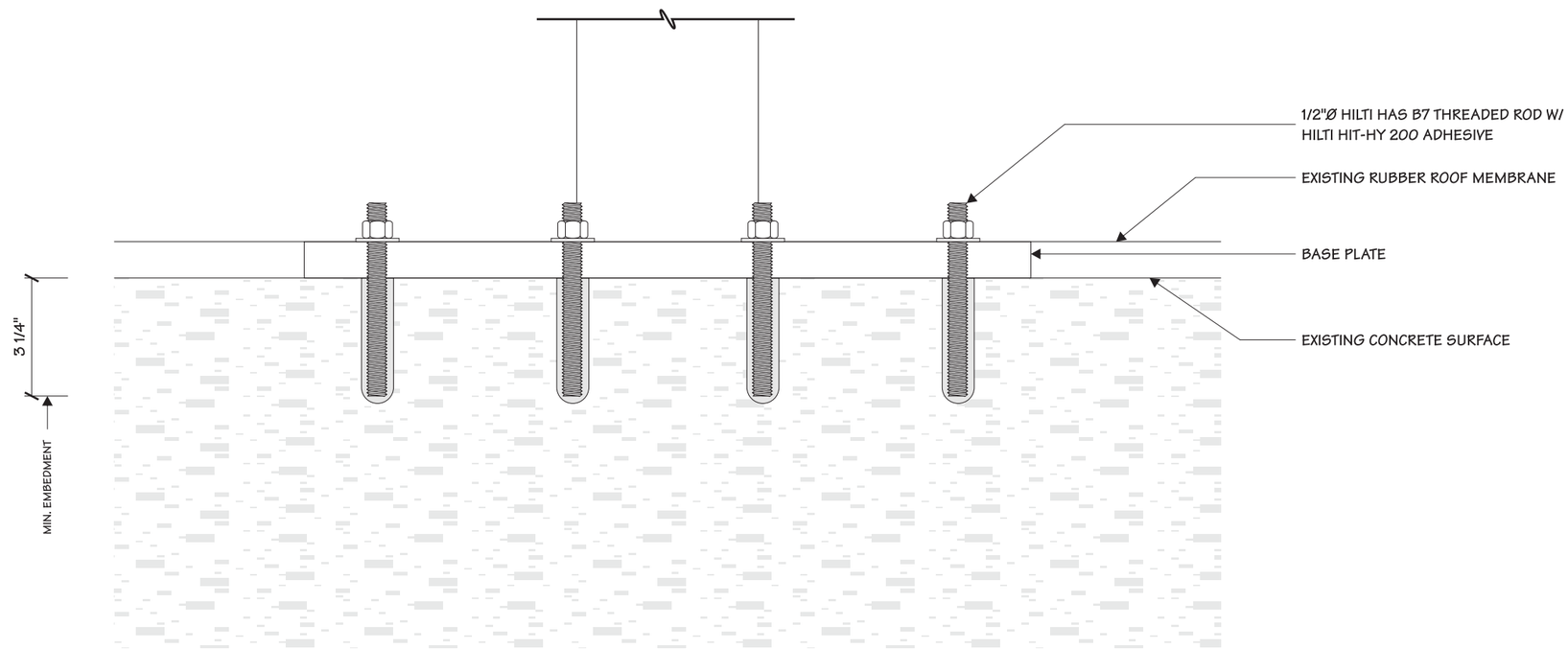

1/9 MOUNTING DETAIL TYP.
1/4" = 1"

Architectural Graphics Incorporated
2655 International Parkway
P.O. Box 9175
Virginia Beach, VA 23450
(757)427-1900

Project Title
Dominion

Date 07.16.14

AGI EoR J. MEYER
Lead Drafter
Drawn By SPK
Project Mgr. N. RAMSAY

General Sign Specifications
☐ Interior ■ Exterior
■ Single Faced ☐ Double Faced
☐ _____
☐ Non-Illuminated
■ Illuminated
_____Volts _____Amps(+/-)
Location RICHMOND, VA
Windload 90 MPH / IBC 2009

Drawing Revisions		
Drawn By	Date	Change
A		
A		
A		
A		
A		
A		
A		
A		
A		
A		
A		

This document is the sole property of Architectural Graphics, Inc., and all design, manufacturing, reproduction, use and sale rights regarding the same are expressly forbidden. It is submitted under a confidential relationship, for a special purpose, and the recipient, by accepting this document assumes custody and agrees that this document will not be copied or reproduced in whole or in part, nor its contents revealed in any manner or to any person except for the purpose for which it was tendered, nor any special features peculiar to this design be incorporated in other projects.

Code 14297
Type C
Sign Type DOM-HR
PG #: 09

1) **UNLESS OTHERWISE SPECIFIED:** All layouts are for a single face sign or a single set of letters and the depth of the application considered for the layout is 5 inches.
2) LED module placement is approximate. AgiLight recommends the sign manufacturer verify the LED placement and quantity to ensure even illumination and brightness expectations are achieved.
3) Estimations are based off the quality of art work and information provided by the customer, this includes: font style, letter height, depth, face material, and any special instructions. Missing information may cause delays in the delivery of estimates, as well as effect product selection, accurate quantities, and brightness.
4) For installation instructions of AgiLight LED systems please refer to www.AgiLight.com under the TOOLS & DOWNLOADS section or contact AgiLight's Inside Sales Team at: +1.866.482.0203

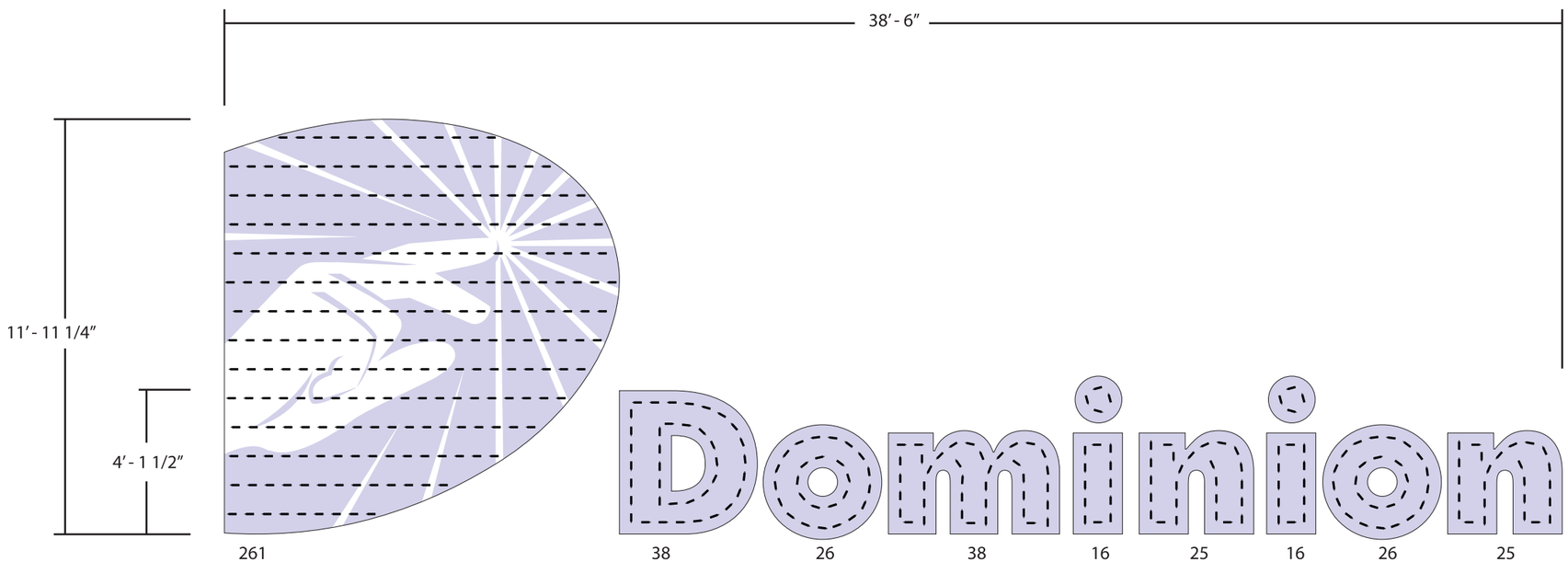

236 feet LS-PRO215-65K-2G3 - 471 Modules
11 - PS12-60WSL-100-277V

Notes:
Letters are based off an 8″ depth.
Logo based off a 12″ depth.
Rows spaced on 10″ centers.

49.5″ Dominion

July 18, 2014 | MP

AGILIGHT
Light It Up
1074 Arion Circle Suite 116, San Antonio, TX 78216
PH: +1 (866) 482-0203 - Fax: +1 (210) 360-1454
www.AgiLight.com

Architectural Graphics Incorporated
2655 International Parkway
P.O. Box 9175
Virginia Beach, VA 23450
(757)427-1900

Project Title
Dominion

Date 07.16.14

AGI EoR J. MEYER
Lead Drafter
Drawn By SPK
Project Mgr. N. RAMSAY

General Sign Specifications
- ☐ Interior ■ Exterior
- ■ Single Faced ☐ Double Faced
- ☐ _____
- ☐ Non-Illuminated
- ■ Illuminated

_____Volts _____Amps(+/-)

Location RICHMOND, VA
Windload 90 MPH / IBC 2009

Drawing Revisions

Drawn By	Date	Change

This document is the sole property of Architectural Graphics, Inc., and all design, manufacturing, reproduction, use and sale rights regarding the same are expressly forbidden. It is submitted under a confidential relationship, for a special purpose, and the recipient, by accepting this document assumes custody and agrees that this document will not be copied or reproduced in whole or in part, nor its contents revealed in any manner or to any person except for the purpose for which it was tendered, nor any special features peculiar to this design be incorporated in other projects.

Code 14297
Type C
Sign Type DOM-HR
PG #: 10

NOTES:
1.) DETAIL DRAWN BY DAVIS HARRIS AND ASSOCIATES AND PROVIDED TO AGI BY DOMINION VIRGINIA POWER

Detail similar to 3/2 drawn by Architectural Graphics INC.

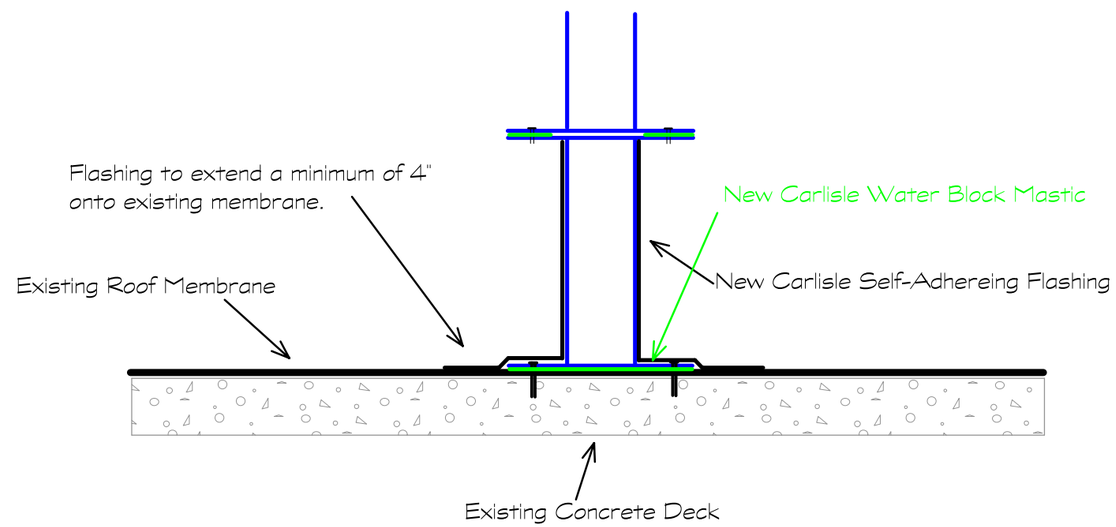

New flashing to be installed per manufacturer's written recommendations

This drawing is the property of DavisHarris & Associates. It may not be reproduced without consent.

DETAIL NUMBER:			
1	Project:	8th & Main Sign	DAVISHARRIS AND ASSOCIATES
	Customer:	Dominion Virginia Power	
	Drawn By:	K.P. Harris, RRO CDT	Date: July 2014
	Detail Name:	Sign Support Flashing	Scale: NTS

Architectural Graphics Incorporated
2655 International Parkway
P.O. Box 9175
Virginia Beach, VA 23450
(757)427-1900

Project Title: Dominion

Date 07.16.14

AGI EoR J. MEYER
Lead Drafter
Drawn By SPK
Project Mgr. N. RAMSAY

General Sign Specifications
- [ ] Interior
- [x] Exterior
- [x] Single Faced
- [ ] Double Faced
- [ ] _____
- [ ] Non-Illuminated
- [x] Illuminated

_____Volts _____Amps(+/-)
Location RICHMOND, VA
Windload 90 MPH / IBC 2009

Drawing Revisions

Drawn By	Date	Change
A		
A		
A		
A		
A		
A		
A		
A		
A		
A		
A		

This document is the sole property of Architectural Graphics, Inc., and all design, manufacturing, reproduction, use and sale rights regarding the same are expressly forbidden. It is submitted under a confidential relationship, for a special purpose, and the recipient, by accepting this document assumes custody and agrees that this document will not be copied or reproduced in whole or in part, nor its contents revealed in any manner or to any person except for the purpose for which it was tendered, nor any special features peculiar to this design be incorporated in other projects.

Code 14297
Type C
Sign Type DOM-HR
PG #: 11