RRMM ARCHITECTS

HAMPTON ROADS
1317 EXECUTIVE BLVD
SUITE 200
CHESAPEAKE, VA 23320
T: 757.622.2828

CENTRAL VIRGINIA
CANAL CROSSING
115 S. 15TH ST
SUITE 202
RICHMOND, VA 23219
T: 804.277.8987

SOUTHWEST VIRGINIA
28 CHURCH AVE SW
ROANOKE, VA 24011
T: 540.344.1212

NORTHERN VIRGINIA
2900 S. QUINCY ST
SUITE 710
ARLINGTON, VA 22206
T: 703.998.0101

MARYLAND
1 RESEARCH CT
SUITE 450
ROCKVILLE, MD 20850
T: 240.403.4101

February 16, 2023

Mr. Raymond A. Roakes
Planner & Urban Design Committee Secretary
Land Use Administration
Department of Planning & Development Review
City of Richmond
900 E. Broad Street, Room 511
Richmond, Virginia 23219

Re: UDC Conceptual Submission – Approval Letter Conditions & Responses
New George Wythe High School
Richmond Public Schools ("RPS")

Dear Mr. Roakes:

RRMM Architects ("RRMM") is pleased to provide the following responses to the conditions of approval provided by the City of Richmond Planning Commission on October 3, 2022, following our conceptual Urban Design Committee (UDC) submission;

Approved Conditions & Responses

No.	Comments
1	Staff recommends that final details on outdoor lighting be sensitive to light pollution or dark-skies compliant.
	Response: All parking lot and walkway pole mounted lighting and building mounted lighting is full cut off, dark-skies compliant (see attached proposed lighting product information sheets). Athletic field lighting has been designed to reduce spill and glare to every extent possible (see attached proposed athletic field lighting product information sheets).
2	Staff recommends inclusion of permeable hardscape materials and sustainable stormwater features, where appropriate, and as suggested by the Urban Design Guidelines.
	Response: No permeable hardscape is proposed due to the extensive amount of maintenance that would be incurred by Richmond Public Schools. Stormwater management is provided for the site and is all underground due to the density of the site layout. Additional sustainable features are included within the design for our LEED certification.
3	Staff recommends that the re-use of existing materials onsite should be incorporated with the design plans, where feasible.
	Response: Contractor is required to re-use existing materials according to our LEED Project Specifications.
4	Staff recommends that a maintenance plan be submitted during the Final UDC review phase to include landscaping, sustainability features, and public spaces.
	Response: Site maintenance guidelines have been outlined on Sheet L3.01 in the submitted drawings by season and by plant type. Maintenance notes provide a general overview of best practices to follow for soils, plants, paving, and drainage

	areas. As noted, this outline should not be considered comprehensive, and priorities should be adjusted by grounds management staff based on real-time needs.
5	Staff recommends the applicant incorporate public art, where feasible.
	Response: RPS is exempt from this City requirement and does not plan to incorporate public art as a part of this project, at this time. However, given that George Wythe High School is a "School for the Arts", possible locations/areas on the site have been discussed with RPS for the potential future display of art created by GWHS students.
6	Staff recommends that the Applicant further improve the architectural façade facing Midlothian Turnpike to reflect the high traffic carried by that right-of-way, for submission of the final Architectural Plans.
	Response: Architectural elements (i.e. windows, glazing and metal paneling) and material dimensioning have been modified to improve the prominence of the façade features facing Midlothian Turnpike.
7	Staff recommends that the Applicant show proposed screen wall that shields maintenance areas from view off Midlothian Turnpike on Final Site Plan submission.
	Response: Screen wall (brick with cast stone cap to match building) and landscaping have been added to shield service yard area.
8	Staff recommends that the Applicant increase visibility from the street to the proposed basketball court for the submission of the Final Site Plan.
	Response: Proposed basketball court has been shifted on the site closer to Crutchfield Street providing increased visibility.
9	Staff recommends that the applicant provide appropriate pedestrian markings and signage where walkways cross internal drive isles and the parking lot for the submission of the Final Site Plan.
	Response: Pavement markings have been incorporated at pedestrian walkways crossing internal drive isles in parking lots.
10	Staff recommends that the applicant improve sidewalk width along the main entrance and drop-off/pickup area facing Crutchfield Street for the submission of the Final Site Plan.
	Response: Sidewalk width along main entrance and drop-off/pick-up area facing Crutchfield has been widened. See revised plans.
11	Staff recommends that Applicant improve pedestrian access to the street to the main entrance along Crutchfield Street for the submission of the Final Site Plan.
	Response: Additional connections have been provided including an ADA accessible sidewalk to the main entrance along Crutchfield Street. See Sheet C2 for locations.

12	Staff recommends that the Applicant work with GRTC to provide and coordinate improvements to the bus stops located adjacent to the site.
	Response: Communication with GRTC remains ongoing to fully understand their needs for this area. Final locations will be coordinated between GRTC, A/E and General Contractor in the field during construction.
13	Staff recommends that the Applicant work with GRTC to relocate the existing bus stop locations to better reflect the proposed site layout to avoid vehicle/pedestrian conflicts as well as increased pedestrian connectivity to the site.
	Response: Communication with GRTC remains ongoing to fully understand their needs for this area. Final locations will be coordinated between GRTC, A/E and General Contractor in the field during construction.
14	Applicant to show bike parking located near the main entrance along Crutchfield Street for the submission of the Final Site Plan.
	Response: Bike parking has been added/located at both the main entrance along Crutchfield Street and the rear entrance along Midlothian Turnpike. See Sheet C2 for locations.
15	Staff recommends that the Applicant consider and detail extreme weather response for final submission.
	Response: George Wythe HS does not plan to be a pre- or post-event shelter. However, RPS does plan to utilize the school as a centralized location for the distribution of resources (i.e. boxed meals, water, blankets, etc.) needed by the community at the conclusion of an event.

If you should have any questions and/or comments, please do not hesitate to contact us.

Sincerely,
RRMM Architects PC

Mark W. Probst
Deputy CEO
Principal

cc: Dana Fox (RPS), Jeff Harris (RRMM)

Project		Catalog #		Type	
Prepared by		Notes		Date	

Lumark

Prevail Discrete LED

Area / Site Luminaire

Product Features

LumenSafe Technology

BAA

Interactive Menu

Product Certifications

Quick Facts

- Direct-mounted discrete light engine for improved optical uniformity and visual comfort
- Lumen packages range from 4,300 - 68,000 nominal lumens (30W - 550W)
- Replaces 70W up to 1,000W HID equivalents
- Efficacies up to 157 lumens per watt
- Standard universal quick mount arm with universal drill pattern

Connected Systems

- WaveLinx

Dimensional Details

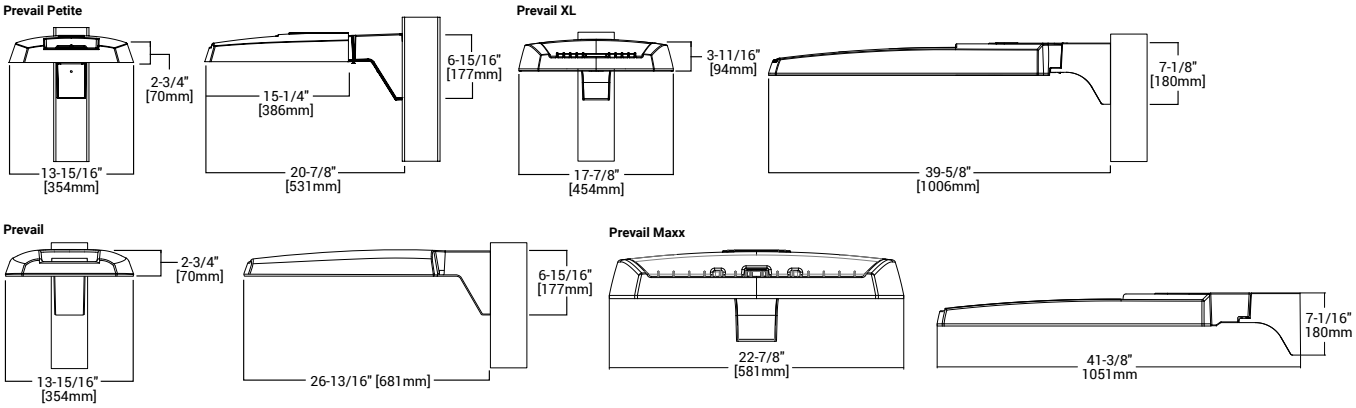

NOTES:
1. Visit https://www.designlights.org/search/ to confirm qualification. Not all product variations are DLC qualified.
2. IDA Certified for 3000K CCT and warmer only.

Ordering Information

SAMPLE NUMBER: **PRV-XL-PA4B-740-U-T4W-BZ**

Product Family [1, 2]	Light Engine		Color Temperature	Voltage	Distribution	Mounting (Included)	Finish
	Configuration	Drive Current [4]					
PRV-P=Prevail Petite **BAA-PRV-P**=Prevail Petite BAA Buy American Act Compliant [3] **TAA-PRV-P**=Prevail Petite TAA Trade Agreements Act Compliant [3]	**PA1**=1 Panel, 24 LED Rectangle	**A**=400mA Nominal **B**=700mA Nominal **C**=950mA Nominal **D**=1200mA Nominal	**740**=70CRI, 4000K **730**=70CRI, 3000K **750**=70CRI, 5000K	**U**=Universal, 120-277V **H**=High Voltage, 347-480V **9**=347V **8**=480V [5] **DV**=DuraVolt, 277-480V [5, 6]	**T2R**=Type II Roadway **T2U**=Type II Urban **T3**=Type III **T4W**=Type IV Wide **5WQ**=Type V Square Wide	**SA**=QM Standard Versatile Arm **MA**=QM Mast Arm **FMA**=Fixed Mast Arm [28] **WM**=QM Wall Mount Arm **ADJA-WM**= Adjustable Arm – Wall Mount [30] **ADJA**=Adjustable Arm – Pole Mount [30] **ADJS**=Adjustable Arm – Slipfitter, 3" vertical tenon [30] **SP2**=Adjustable Arm – Slipfitter, 2 3/8" vertical tenon [30]	**AP**=Grey **BZ**=Bronze **BK**=Black **DP**=Dark Platinum **GM**=Graphite Metallic **WH**=White
PRV=Prevail **BAA-PRV**=Prevail BAA Buy American Act Compliant [3] **TAA-PRV**=Prevail TAA Trade Agreements Act Compliant [3]	**PA1**=1 Panel, 24 LED Rectangle **PA2**=2 Panels, 48 LED Rectangles	**A**=700mA Nominal **B**=950mA Nominal					
PRV-XL=PRV XL **BAA-PRV-XL**=Prevail XL BAA Buy American Act Compliant [3] **TAA-PRV-XL**=Prevail XL TAA Trade Agreements Act Compliant [3]	**PA3**=3 Panels, 72 LED Rectangles **PA4**=4 Panels, 96 LED Rectangles	**A**=750mA Nominal **B**=950mA Nominal					
PRV-M=Prevail Maxx **BAA-PRV-M**=Prevail Maxx BAA Buy American Act Compliant [3] **TAA-PRV-M**=Prevail Maxx TAA Trade Agreements Act Compliant [3]	**PA6**= 6 Panels, 144 LED Rectangles	**A**=600mA Nominal **B**=800mA Nominal **C**=1000mA Nominal **D**=1200mA Nominal					

Options (Add as Suffix)

10K=10kV UL 1449 Fused Surge Protective Device
20MSP=20kV MOV Surge Protective Device
20K=20kV UL 1449 Fused Surge Protective Device
L90=Optics Rotated 90° Left
R90=Optics Rotated 90° Right
CC=Coastal Construction finish [31]
HSS=House Side Shield (Factory Installed) [7]
HA=50°C High Ambient Temperature [8]
PR=NEMA 3-PIN Twistlock Photocontrol Receptacle [10]
PR7=NEMA 7-PIN Twistlock Photocontrol Receptacle [10]
MS/DIM-L08=Motion Sensor for Dimming Operation, Up to 8' Mounting Height [11, 12, 13, 28]
MS/DIM-L20=Motion Sensor for Dimming Operation, 9' - 20' Mounting Height [11, 12, 22, 13]
MS/DIM-L40=Motion Sensor for Dimming Operation, 21' - 40' Mounting Height [11, 12, 13]
SPB1=Motion Sensor for Dimming Operation, BLE Interface, Up to 8' Mounting Height [11, 14, 22, 28]
SPB2=Motion Sensor for Dimming Operation, BLE Interface, 8' - 20' Mounting Height [11, 14, 22]
SPB4=Motion Sensor for Dimming Operation, BLE Interface, 21' - 40' Mounting Height [11, 14]
ZW=Wavelinx-enabled 4-PIN Twistlock Receptacle [11, 12]
ZD=DALI-enabled 4-PIN Twistlock Receptacle [11, 12]

ZW-SWPD4XX=Wavelinx Pro, Dimming Motion and Daylight, WAC Programmable, 7' - 15' Mounting Height [11, 12, 15, 16, 17, 22, 28]
ZW-SWPD5XX=Wavelinx Pro, Dimming Motion and Daylight, WAC Programmable, 15' - 40' Mounting Height [11, 12, 15, 16, 17]
ZD-SWPD4XX=Wavelinx Pro, SR Driver, Dimming Motion and Daylight, 7' - 15' Mounting Height [11, 12, 15, 16, 17, 22, 28]
ZD-SWPD5XX=Wavelinx Pro, SR Driver, Dimming Motion and Daylight, 15' - 40' Mounting Height [11, 12, 15, 16, 17]
(See Table Below)=LumenSafe Integrated Network Security Camera [18, 19]

Accessories (Order Separately) [20, 21]

PRVWM-XX=Wall Mount Kit [22]
PRV-ADJA-XX=Adjustable Arm - Pole Mount Kit [22]
PRV-ADJS-XX=Adjustable Arm - Slipfitter Kit [22]
PRV-ADJA-WM-XX=Adjustable Arm - Wall Mount Kit [22]
PRVXLSA-XX=Standard Arm Mounting Kit [29]
PRVXLMA-XX=Mast Arm Mounting Kit [29]
PRVXLWM-XX=Wall Mount Kit [29]
PRV-XL-ADJA-XX=Adjustable Arm - Pole Mount Kit [29]
PRV-XL-ADJA-WM-XX=Adjustable Arm - Slipfitter Kit [29]
PRV-XL-ADJS-XX=Adjustable Arm - Wall Mount Kit [29]
PRV-M-ADJA-XX=Adjustable Arm - Pole Mount Kit [28]
PRV-M-ADJS-XX=Adjustable Arm - Slipfitter Kit [28]
PRV-M-ADJA-WM-XX=Adjustable Arm - Wall Mount Kit [28]
MA1010-XX=Single Tenon Adapter for 3-1/2" O.D. Tenon
MA1011-XX=2@180°Tenon Adapter for 3-1/2" O.D. Tenon

MA1017-XX=Single Tenon Adapter for 2-3/8" O.D. Tenon
MA1018-XX=2@180° Tenon Adapter for 2-3/8" O.D. Tenon
PRV/DIS-FDV=Full Drop Visor [23]
PRVXL/DIS-FDV=Full Drop Visor [18]
HSS-VP=House Side Shield Kit, Vertical Panel [7, 24]
HSS-HP=House Side Shield Kit, Horizontal Panel [7, 24]
PDS-S= Panel Drop Shield, Short
PDS-L= Panel Drop Shield, Long
OA/RA1013=Photocontrol Shorting Cap
OA/RA1014=NEMA Photocontrol - 120V
OA/RA1016=NEMA Photocontrol - Multi-Tap 105-285V
OA/RA1201=NEMA Photocontrol - 347V
OA/RA1027=NEMA Photocontrol - 480V
FSIR-100=Wireless Configuration Tool for Occupancy Sensor [25]
WOLC-7P-10A=WaveLinx Outdoor Control Module (7-PIN) [27]
SWPD4-XX=WaveLinx Wireless Sensor, 7' - 15' Mounting Height [15, 16, 17, 26]
SWPD5-XX=WaveLinx Wireless Sensor, 15' - 40' Mounting Height [15, 16, 17, 26]

NOTES:
1. DesignLights Consortium® Qualified. Refer to www.designlights.org Qualified Products List under Family Models for details.
2. Customer is responsible for engineering analysis to confirm pole and fixture compatibility for applications. Refer to installation instructions and pole white paper WP513001EN for additional support information.
3. Only product configurations with these designated prefixes are built to be compliant with the Buy American Act of 1933 (BAA) or Trade Agreements Act of 1979 (TAA), respectively. Please refer to DOMESTIC PREFERENCES website for more information. Components shipped separately may be separately analyzed under domestic preference requirements.
4. Nominal drive currents shown here. For actual drive current by configuration, refer to Power and Lumens tables.
5. 480V not to be used with ungrounded or impedance grounded systems.
6. DuraVolt drivers feature added protection from power quality issues such as loss of neutral, transients and voltage fluctuations. Visit www.signify.com/duravolt for more information.
7. House Side Shield not for use with 5WQ distribution.
8. Not available with PA1D light engine in Petite housing (PRV-P).
10. If High Voltage (H) or DuraVolt (DV) is specified, use a photocontrol that matches the input voltage used.
11. Controls system is not available in combination with a photocontrol receptacle (PR or PR7) or another controls system (MS, SPB, ZD, or ZW).
12. Option not available with High Voltage (H) or DuraVolt (DV). Must specify Universal (U), 347V (9), or 480V (8) voltage.
13. Utilizes the Wattstopper sensor FSP-211. Sensor color white unless specified otherwise via PDR. To field-configure, order FSIR-100 accessory separately.
14. Utilizes the Wattstopper sensor FSP-3XX series. Sensor color determined by product finish. See Sensor Color Reference Table. Field-configures via mobile application. See Controls section for details.
15. Sensor passive infrared (PIR) may be overly sensitive when operating below -20°C (-4°F).
16. In order for the device to be field-configurable, requires WAC Gateway components WAC-PoE and WPOE-120 in appropriate quantities. Only compatible with WaveLinx system and software and requires system components to be installed for operation. See website for more Wavelinx application information.
17. Replace XX with sensor color (WH, BZ or BK).
18. Only available in PRV-XL configurations.
19. Not available with High Voltage (H, DV, 8 or 9) or HA options. Consult LumenSafe system product pages for additional details and compatability information.
20. Replace XX with paint color.
21. For BAA or TAA requirements, Accessories sold separately will be separately analyzed under domestic preference requirements. Consult factory for further information.
22. Not for use with PRV-XL or PRV-M configurations.
23. Only for use with PRV. Not applicable to PRV-M, PRV-XL, or PRV-P.
24. Must order one per optic/LED when ordering as a field-installable accessory (1, 2, 3, 4, or 6). Refer to House Side Shield reference table for details.
25. This tool enables adjustment to Motion Sensor (MS) parameters including high and low modes, sensitivity, time delay, cutoff and more. Consult your lighting representative for more information.
26. Requires 4-PIN twistlock receptacle option (ZD or ZW) option.
27. Requires 7-PIN NEMA twistlock photocontrol receptacle (PR7) option. The WOLC-7 cannot be used in conjunction with other controls systems (MS, ZD, ZW or LWR). Only for use at 120-347V.
28.Only available for PRV-M configurations.
29. Only for use with PRV-XL and PRV-M configurations. Not applicable to PRV or PRV-P.
30. Adjustable Arms QM for PRV-P, PRV, PRV-XL; Fixed for PRV-M
31. Coastal construction finish salt spray tested to over 5,000-hours per ASTM B117, with a scribe rating of 9 per ASTM D1654.

LumenSafe Integrated Network Security Camera Technology Options (Add as Suffix)

Product Family	Camera Type	Data Backhaul	
L=LumenSafe Technology	**H**=Dome Camera, High Res **Z**=Dome Camera, Remote PTZ	**C**=Cellular, Customer Installed SIM Card **A**=Cellular, Factory Installed AT&T SIM Card **V**=Cellular, Factory Installed Verizon SIM Card	**S**=Cellular, Factory Installed Sprint SIM Card **E**=Ethernet Networking

Mounting Details

SA=QM Pole Mount Arm (PRV & PRV-P)

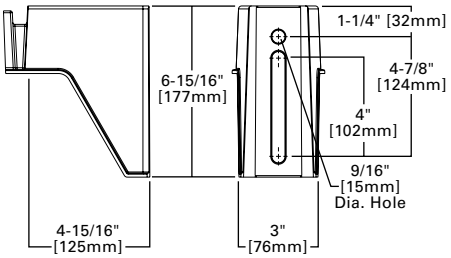

SA=QM Pole Mount Arm (PRV-XL)

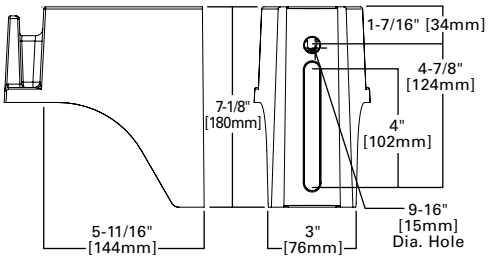

WM=QM Wall Mount Arm (PRV & PRV-P)

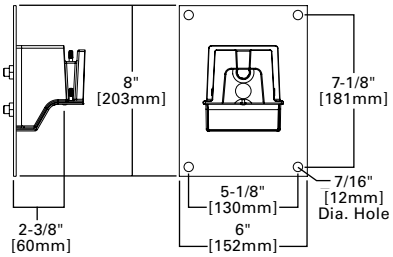

WM=QM Wall Mount Arm (PRV-XL)

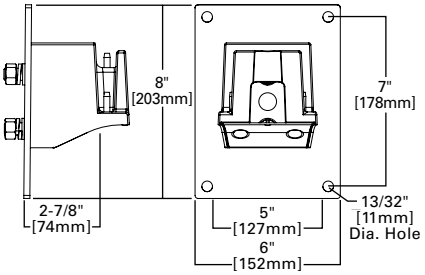

MA=QM Mast Arm (PRV & PRV-P)

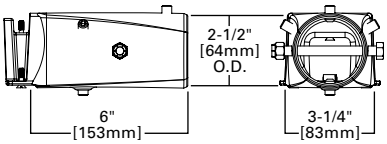

MA=QM Mast Arm (PRV-XL)

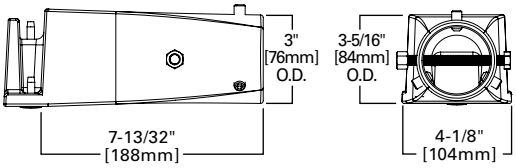

ADJA=Adjustable Arm Pole Mount (PRV & PRV-P)

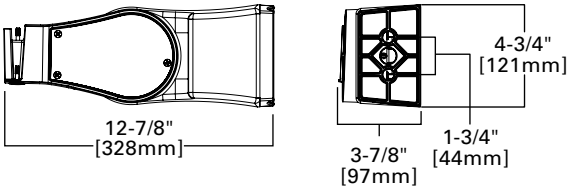

ADJA=Adjustable Arm Pole Mount (PRV-XL)

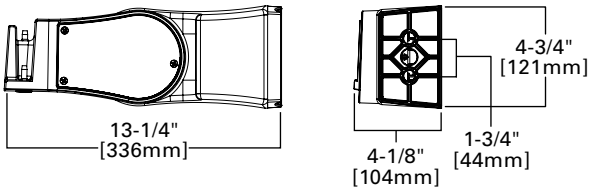

ADJA-WM=Adjustable Arm Wall Mount (PRV & PRV-P)

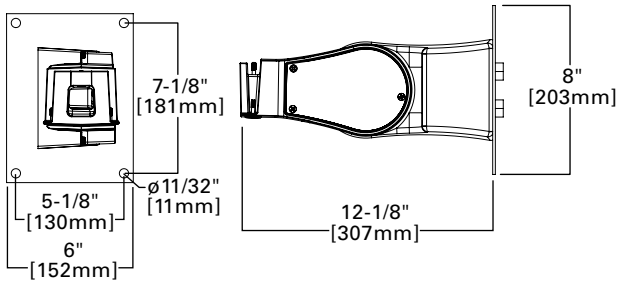

ADJA-WM=Adjustable Arm Wall Mount (PRV-XL)

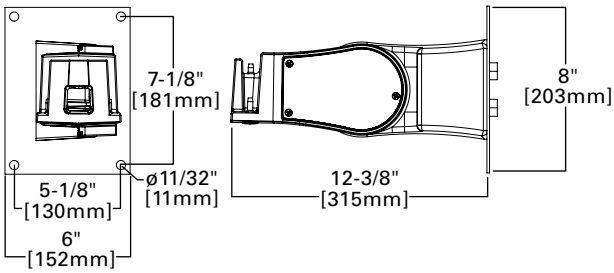

ADJS=Adjustable Slipfitter 3 (PRV & PRV-P)

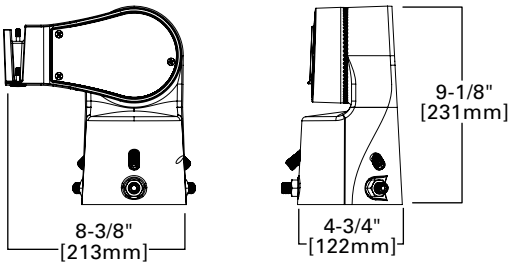

ADJS=Adjustable Slipfitter 3 (PRV-XL)

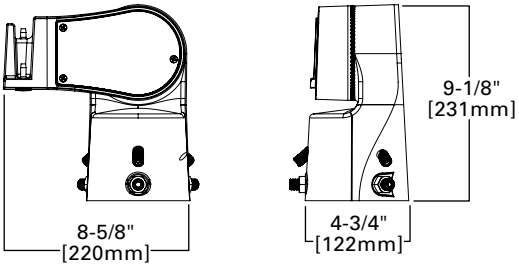

Mounting Details

SA=QM Pole Mount Arm (PRV-M)

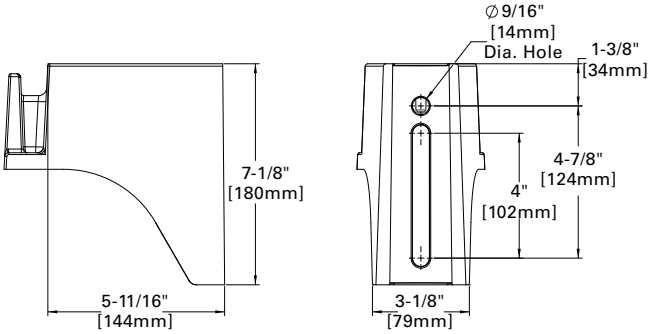

Versatile Mount System

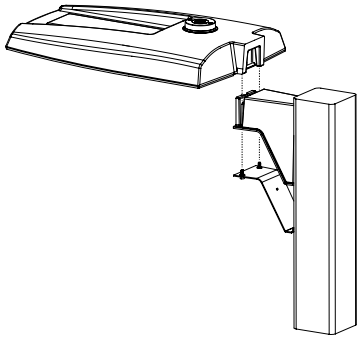

WM=QM Wall Mount Arm (PRV-M)

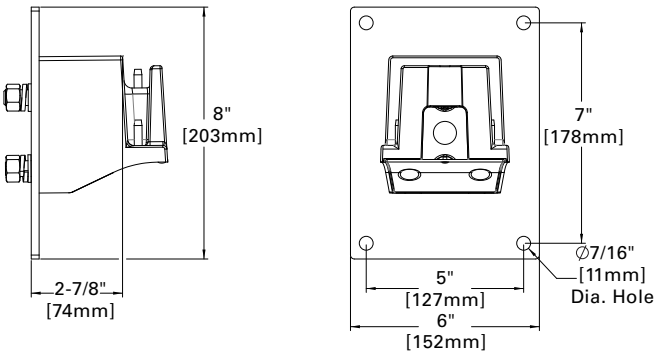

ADJS=Adjustable Slipfitter (PRV-M)

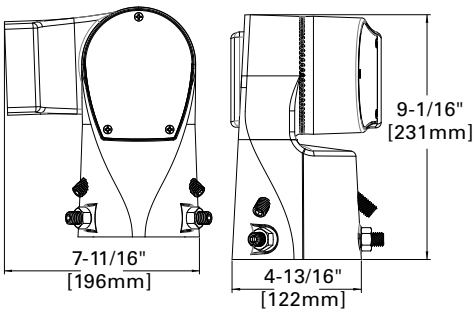

MA=QM Mast Arm (PRV-M)

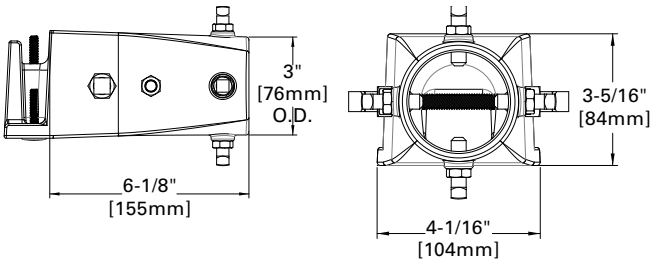

SP2=Adjustable Slipfitter 2-3/8" (PRV-M)

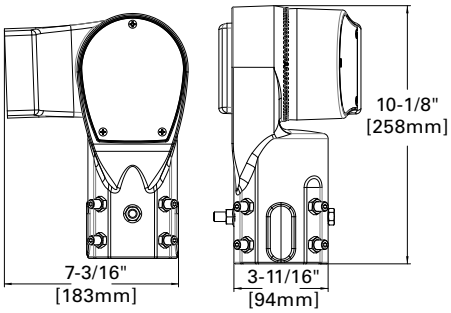

FMA=Fixed Mast Arm (PRV-M)

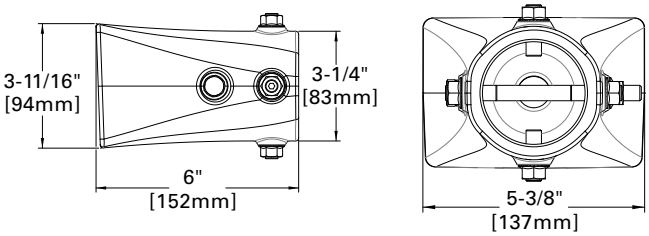

DM=Direct Pole Mount Arm (PRV-M)

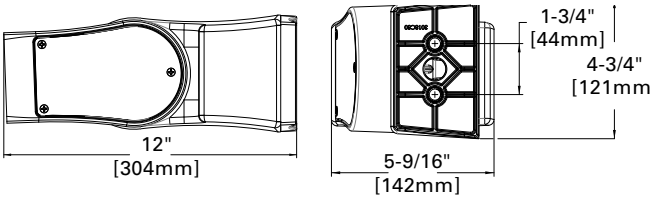

Mounting Details

Mounting Configurations and EPAs

NOTE: For 2 PRV's mounted at 90°, requires minimum 3" square or 4" round pole for fixture clearance. For 2 PRV-XL's mounted at 90°, requires minimum 4" square or round pole for fixture clearance. Customer is responsible for engineering analysis to confirm pole and fixture compatibility for applications

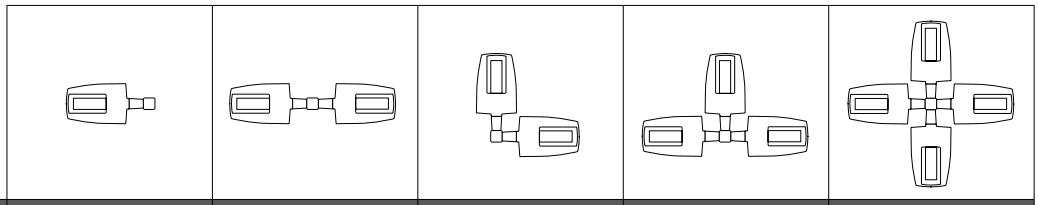

Housing Size	Tilt Angle (Degrees)	Arm Mount Single	Arm Mount 2 @ 180°	Arm Mount 2 @ 90°	Arm Mount 3 @ 90°	Arm Mount 4 @ 90°
Prevail Petite	0°	0.54	1.08	0.84	1.38	1.38
	60°	1.68	1.85	2.42	3.15	3.30
Prevail	0°	0.92	1.35	1.42	1.63	1.63
	60°	2.20	2.40	3.05	3.88	4.07
	60° + Full Drop Visor	2.20	2.40	3.25	4.28	4.47
Prevail XL	0°	1.12	2.25	2.13	2.52	2.52
	60°	3.99	4.30	5.26	6.51	6.79
	60° + Full Drop Visor	3.99	4.30	5.59	7.17	7.49
Prevail Maxx	0°	1.28	2.56	1.7	2.69	2.69
	60°	5.09	5.52	6.34	7.49	7.81

Optical Configurations

PRV-P-PA1X **PRV-PA1X** **PRV-PA2X** **PRV-XL-PA3X** **PRV-XL-PA4X** **PRV-M-PA6X**

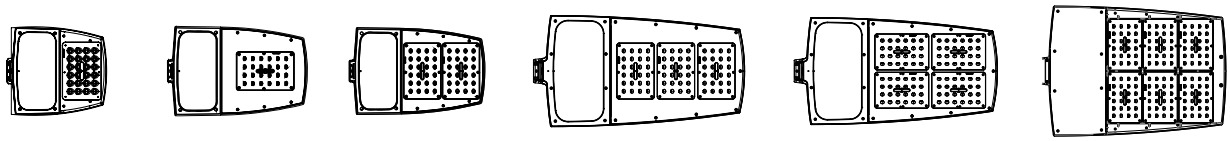

Optical Distributions

T2R (Type II Roadway) **T2U** (Type II Urban) **T3** (Type III) **T4W** (Type IV Wide) **5WQ** (Type V Square Wide)

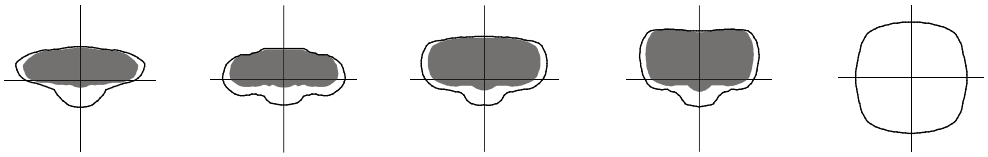

= Distribution with House Side Shield (HSS)

= Optical Distribution

Product Specifications

Construction
- Single-piece die-cast aluminum housing
- Tethered die-cast aluminum door

Optics
- Dark Sky Approved (3000K CCT and warmer only)
- Precision molded polycarbonate optics

Electrical
- -40°C minimum operating temperature
- 40°C maximum operating temperature
- >.9 power factor
- <20% total harmonic distortion
- Class 1 electronic drivers have expected life of 100,000 hours with <1% failure rate
- 0-10V dimming driver is standard with leads external to the fixture
- Standard MOV surge protective device designed to withstand 10kV of transient line surge

Mounting
- Versatile, patented, standard mount arm accommodates multiple drill patterns ranging from 1-1/2" to 4-7/8" (Type M drilling recommended for new installations)
- A knock-out on the standard mounting arm enables round pole mounting
- Adjustable pole and wall mount arms adjust in 5° increments from 0° to 60°; Downward facing orientation only (Type N drilling required for ADJA mount)
- Adjustable slipfitter arm adjusts in 5° increments from -5° to 85°; Downward facing orientation only
- Prevail and Prevail Petite: 3G vibration rated (all arms)
- Prevail XL Mast Arm: 3G vibration rated
- Prevail XL Standard Arm: 1.5G vibration rated
- Adjustable Arms: 1.5G vibration rated

Finish
- Five-stage super TGIC polyester powder coat paint, 2.5 mil nominal thickness
- Finish is compliant to 3,000 hour salt spray standard (per ASTM B117)

Typical Applications
- Parking lots, Walkways, Roadways and Building Areas

Shipping Data
- Prevail Petite: 18 lbs. (7.94 kgs.)
- Prevail: 20 lbs. (9.09 kgs.)
- Prevail XL: 45 lbs. (20.41 kgs.)
- Prevail Maxx: 49 lbs. (22.23 kgs.)

Warranty
- Five year limited warranty, consult website for details. www.cooperlighting.com/legal

Energy and Performance Data

Power and Lumens

View PRV-P IES files | View PRV IES files | View PRV-XL IES files

Product Family		Prevail Petite				Prevail				Prevail XL				Prevail Maxx			
Light Engine		PA1A	PA1B	PA1C	PA1D	PA1A	PA1B	PA2A	PA2B	PA3A	PA3B	PA4A	PA4B	PA6A	PA6B	PA6C	PA6D
Power (Watts)		31	53	72	93	54	74	113	151	172	234	245	303	274	366	457	544
Drive Current (mA)		375	670	930	1200	670	930	720	970	750	980	785	970	600	800	1000	1200
Input Current @ 120V (A)		0.26	0.44	0.60	0.78	0.45	0.62	0.93	1.26	1.44	1.95	2.04	2.53	2.30	3.05	3.83	4.54
Input Current @ 277V (A)		0.12	0.20	0.28	0.35	0.21	0.28	0.41	0.55	0.62	0.85	0.93	1.12	0.99	1.30	1.62	1.94
Input Current @ 347V (A)		0.10	0.17	0.23	0.29	0.17	0.23	0.33	0.45	0.52	0.70	0.74	0.90	0.78	1.05	1.32	1.60
Input Current @ 480V (A)		0.07	0.13	0.17	0.22	0.12	0.17	0.24	0.33	0.39	0.52	0.53	0.65	0.58	0.76	0.95	1.14
Distribution																	
Type II Roadway	4000K/5000K Lumens	4,505	7,362	9,495	11,300	7,605	9,896	15,811	19,745	24,718	30,648	34,067	39,689	41,611	52,596	61,921	67,899
	BUG Rating	B1-U0-G1	B1-U0-G2	B1-U0-G2	B1-U0-G2	B1-U0-G2	B1-U0-G2	B2-U0-G3	B2-U0-G3	B3-U0-G3	B3-U0-G4	B3-U0-G4	B3-U0-G4	B3-U0-G4	B4-U0-G5	B4-U0-G5	B4-U0-G5
	Lumens per Watt	147	139	132	121	141	134	141	131	144	131	139	131	152	144	135	125
	3000K Lumens [1]	4,103	6,705	8,647	10,291	6,926	9,012	14,399	17,982	22,511	27,912	31,025	36,145	37,896	47,900	56,392	61,837
Type II Roadway w/ HSS	4000K/5000K Lumens	3,727	6,091	7,855	9,349	6,006	7,815	12,487	15,594	19,521	24,204	26,094	31,334	32,874	41,553	48,919	53,642
	BUG Rating	B0-U0-G1	B0-U0-G2	B0-U0-G2	B1-U0-G2	B0-U0-G1	B1-U0-G2	B1-U0-G2	B1-U0-G2	B1-U0-G3	B1-U0-G3	B1-U0-G4	B1-U0-G4	B2-U0-G4	B2-U0-G4	B2-U0-G5	B2-U0-G5
	Lumens per Watt	121	115	109	100	111	106	111	103	113	103	107	103	120	114	107	99
	3000K Lumens [1]	3,394	5,547	7,154	8,514	5,470	7,117	11,372	14,201	17,778	22,043	24,502	28,545	29,939	37,843	44,552	48,853
Type II Urban	4000K/5000K Lumens	4,496	7,347	9,476	11,277	7,597	9,886	15,795	19,724	24,692	30,616	34,031	39,647	41,372	52,294	61,565	67,509
	BUG Rating	B1-U0-G1	B2-U0-G2	B2-U0-G2	B3-U0-G3	B2-U0-G2	B3-U0-G3	B3-U0-G3	B3-U0-G3	B4-U0-G4	B4-U0-G4	B4-U0-G4	B4-U0-G4	B4-U0-G4	B5-U0-G5	B5-U0-G5	B5-U0-G5
	Lumens per Watt	146	139	131	121	141	134	141	131	144	131	139	131	151	143	135	124
	3000K Lumens [1]	4,095	6,691	8,630	10,271	6,919	9,003	14,384	17,963	22,488	27,882	30,992	36,107	37,678	47,625	56,068	61,481
Type II Urban w/ HSS	4000K/5000K Lumens	3,253	5,316	6,856	8,160	5,297	6,893	11,013	13,753	17,217	21,347	23,728	27,644	28,951	36,594	43,082	47,241
	BUG Rating	B1-U0-G1	B1-U0-G1	B1-U0-G2	B1-U0-G2	B1-U0-G1	B1-U0-G2	B1-U0-G2	B2-U0-G2	B2-U0-G2	B2-U0-G3	B2-U0-G3	B3-U0-G4	B3-U0-G4	B3-U0-G4	B3-U0-G5	B3-U0-G5
	Lumens per Watt	106	101	95	87	98	93	97	91	100	91	97	91	106	100	94	87
	3000K Lumens [1]	2,963	4,841	6,244	7,431	4,824	6,277	10,029	12,525	15,680	19,441	21,609	25,176	26,366	33,327	39,235	43,023
Type III	4000K/5000K Lumens	4,443	7,261	9,364	11,145	7,575	9,857	15,749	19,667	24,621	30,527	33,932	39,532	41,155	52,020	61,242	67,155
	BUG Rating	B1-U0-G1	B1-U0-G2	B2-U0-G2	B2-U0-G2	B1-U0-G2	B2-U0-G3	B3-U0-G3	B3-U0-G3	B3-U0-G4	B3-U0-G5	B3-U0-G5	B4-U0-G5	B4-U0-G5	B4-U0-G5	B4-U0-G5	B4-U0-G5
	Lumens per Watt	145	138	130	119	140	133	141	130	143	130	138	130	150	142	134	123
	3000K Lumens [1]	4,046	6,612	8,528	10,150	6,899	8,977	14,343	17,911	22,423	27,802	30,903	36,002	37,480	47,375	55,774	61,159
Type III w/ HSS	4000K/5000K Lumens	3,406	5,566	7,179	8,543	5,592	7,277	11,626	14,519	18,176	22,536	25,049	29,183	30,159	38,121	44,879	49,212
	BUG Rating	B0-U0-G1	B1-U0-G2	B1-U0-G2	B1-U0-G2	B1-U0-G2	B1-U0-G2	B1-U0-G2	B1-U0-G3	B2-U0-G4	B2-U0-G4	B2-U0-G4	B2-U0-G5	B2-U0-G5	B3-U0-G5	B3-U0-G5	B3-U0-G5
	Lumens per Watt	111	105	100	91	104	98	103	96	106	96	102	96	110	104	98	90
	3000K Lumens [1]	3,102	5,069	6,538	7,781	5,093	6,627	10,588	13,222	16,553	20,524	22,813	26,578	27466	34717	40872	44818
Type IV Wide	4000K/5000K Lumens	4,348	7,106	9,164	10,906	7,484	9,738	15,560	19,431	24,325	30,161	33,525	39,057	41,207	52,086	61,320	67,240
	BUG Rating	B1-U0-G2	B2-U0-G2	B2-U0-G2	B2-U0-G3	B2-U0-G2	B2-U0-G3	B3-U0-G3	B3-U0-G4	B3-U0-G4	B3-U0-G5	B3-U0-G5	B4-U0-G5	B4-U0-G5	B4-U0-G5	B4-U0-G5	B4-U0-G5
	Lumens per Watt	142	135	127	117	139	132	139	129	141	129	137	129	151	142	134	124
	3000K Lumens [1]	3,960	6,471	8,346	9,932	6,816	8,869	14,170	17,696	22,153	27,468	30,531	35,570	37,528	47,435	55,845	61,236
Type IV Wide w/ HSS	4000K/5000K Lumens	3,318	5,422	6,993	8,323	5,420	7,053	11,268	14,072	17,617	24,843	24,279	28,286	30,005	37,926	44,650	48,961
	BUG Rating	B0-U0-G1	B1-U0-G2	B1-U0-G2	B1-U0-G2	B1-U0-G2	B1-U0-G2	B1-U0-G3	B1-U0-G3	B1-U0-G4	B2-U0-G4	B2-U0-G4	B2-U0-G5	B2-U0-G5	B3-U0-G5	B3-U0-G5	B3-U0-G5
	Lumens per Watt	108	103	97	89	100	95	100	93	102	106	99	93	110	104	98	90
	3000K Lumens [1]	3,022	4,938	6,369	7,580	4,936	6,423	10,262	12,816	16,044	19,892	22,111	25,760	27,326	34,540	40,664	44,589
Type V Square Wide	4000K/5000K Lumens	4,497	7,349	9,478	11,280	7,831	10,190	16,281	20,332	25,453	31,559	35,079	40,868	42,947	54,285	63,909	70,079
	BUG Rating	B3-U0-G1	B3-U0-G2	B4-U0-G2	B4-U0-G2	B3-U0-G2	B4-U0-G3	B4-U0-G3	B5-U0-G3	B5-U0-G4	B5-U0-G5	B5-U0-G5	B5-U0-G5	B5-U0-G5	B5-U0-G5	B5-U0-G5	B5-U0-G5
	Lumens per Watt	146	139	131	121	145	138	145	135	148	135	143	135	157	143	136	129
	3000K Lumens [1]	4,095	6,693	8,632	10,273	7,132	9,280	14,827	18,517	23,180	28,741	31,947	37,219	39,112	49,438	58,203	63,822

NOTES:
1. For 3000K or HSS BUG Ratings, refer to published IES files

Energy and Performance Data

House Side Shield Reference Table

Product Family		Prevail	Prevail		Prevail XL		Prevail Maxx
Light Engine		PA1	PA1	PA2	PA3	PA4	PA6
Rotated Optics	Standard	HSS-HP (Qty 1)	HSS-VP (Qty 1)	HSS-HP (Qty 2)	HSS-HP (Qty 3)	HSS-VP (Qty 4)	HSS-HP (qty 6)
	L90 or R90 option	HSS-VP (Qty 1)	HSS-HP (Qty 1)	HSS-VP (Qty 2)	HSS-VP (Qty 3)	HSS-HP (Qty 4)	HSS-VP (qty 6)

Sensor Color Reference Table (SPBx)

Housing Finish	Sensor Color
AP=Grey	Grey
BZ=Bronze	Bronze
BK=Black	Black
DP=Dark Platinum	Grey
GM=Graphite Metallic	Black
WH=White	White

Lumen Multiplier

Ambient Temperature	Lumen Multiplier
0°C	1.02
10°C	1.01
25°C	1.00
40°C	0.99
50°C	0.97

Lumen Maintenance

Ambient Temperature	TM-21 Lumen Maintenance (78,000 Hours)	Theoretical L70 (Hours)
Up to 50°C	96.76%	> 896,000

Control Options

0-10V This fixture provides 0-10V dimming wire leads for use with a lighting control panel or other control method.

Photocontrol (PR and PR7) Photocontrol receptacles provide a flexible solution to enable "dusk-to-dawn" lighting by sensing light levels. Advanced control systems compatible with NEMA 7-PIN standards can be utilized with the PR7 receptacle.

Dimming Occupancy Sensor (SPB, MS/DIM-LXX and MS-LXX) These sensors are factory installed in the luminaire housing. When the SPB or MS/DIM sensor options are selected, the luminaire will dim down after five minutes of no activity detected. When activity is detected, the luminaire returns to full light output. When a sensor for ON/OFF operation (MS-LXX) is selected, the luminaire will turn off after five minutes of no activity. These occupancy sensors include an integral photocell for "dusk-to-dawn" control or "daylight harvesting." Factory default is enabled for the MS sensors and disabled for the SPB. SPB motion sensors require the Sensor Configuration mobile application by Wattstopper to change factory default dimming level, time delay, sensitivity and other parameters. Available for iOS and Android devices. The SPB sensor is factory preset to dim down to approximately 10% power with a time delay of five minutes.

For mounting heights up to 8' (SPB1, -L08)

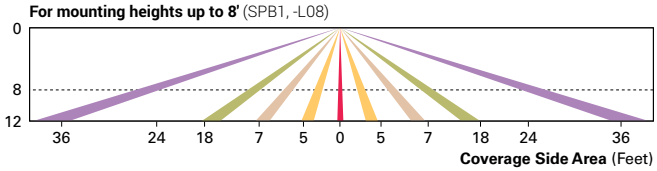

For mounting heights up to 20' (SPB2, -L20)

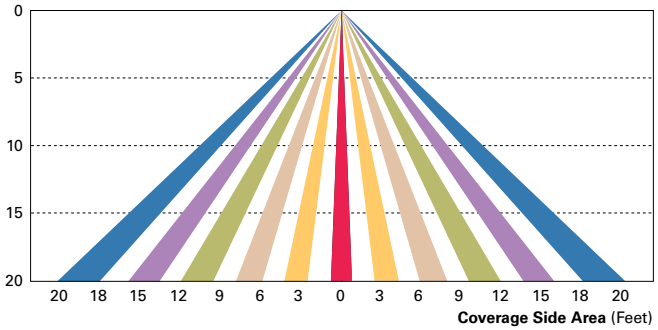

For mounting heights up to 40' (SPB4, -L40W)

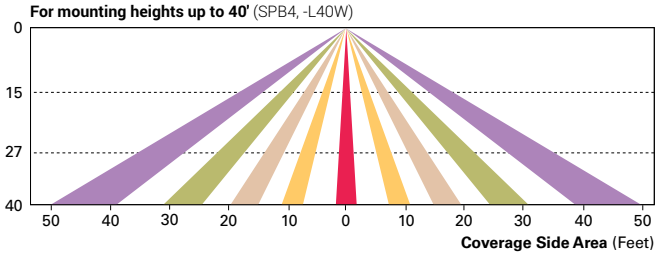

WaveLinx Wireless Control and Monitoring System Available in 7-PIN or 4-PIN configurations, the WaveLinx Outdoor control platform operates on a wireless mesh network based on IEEE 802.15.4 standards enabling wireless control of outdoor lighting. At least one Wireless Area Controller (WAC) is required for full functionality and remote communication (including adjustment of any factory pre-sets).

WaveLinx Outdoor Control Module (WOLC-7P-10A) A photocontrol that enables astronomic or time-based schedules to provide ON, OFF and dimming control of fixtures utilizing a 7-PIN receptacle. The out-of-box functionality is ON at dusk and OFF at dawn.

WaveLinx Wireless Sensor (SWPD4 and SWPD5) These outdoor sensors offer passive infrared (PIR) occupancy sensing and a photocell for closed-loop daylight sensing. These sensors can be factory installed or field-installed via simple, tool-less integration into luminaires equipped with the Zhaga Book 18 compliant 4-PIN receptacle (ZD or ZW). These sensors are factory preset to dim down to approximately 50 percent power after 15 minutes of no activity detected, and the photocell for "dusk-to-dawn" control is default enabled. A variety of sensor lenses are available to optimize the coverage pattern for mounting heights from 7'-40'.

For mounting heights 16' to 40' (SWPD)

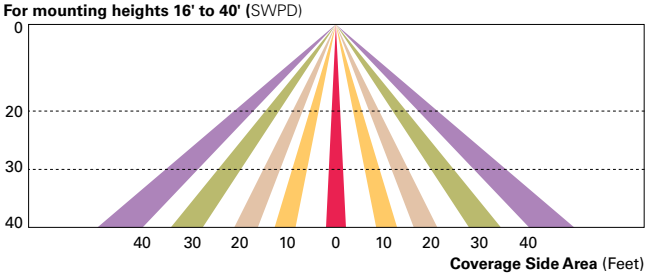

LumenSafe (LD) The LumenSafe integrated network camera is a streamlined, outdoor-ready camera that provides high definition video surveillance. This IP camera solution is optimally designed to integrate into virtually any video management system or security software platform of choice. No additional wiring is needed beyond providing line power to the luminaire. LumenSafe features factory-installed power and networking gear in a variety of networking options allowing security integrators to design the optimal solution for active surveillance.

Cooper Lighting Solutions
1121 Highway 74 South
Peachtree City, GA 30269
P: 770-486-4800
www.cooperlighting.com

Project		Catalog #		Type	
Prepared by		Notes		Date	

Lumark

Prevail Petite Discrete Wall

Wall Mount Luminaire

Product Features

BAA

Interactive Menu

Product Certifications

ISO CERTIFIED, UL CERTIFIED, DLC LISTED [1], DLC PREMIUM [1], FC CLASS A CAN ICES-005, RoHS COMPLIANT, IP66, ida [2], 5 YEAR LIMITED WARRANTY

Quick Facts

- Direct-mounted discrete light engine for improved optical uniformity and visual comfort
- Lumen packages range from 4,300 - 11,300 lumens (30W - 90W)
- Replaces 70W up to 250W HID equivalents
- Efficacies up to 147 lumens per watt
- Surface mount configuration with standard conduit entry

Connected Systems

- WaveLinx

Dimensional Details

Surface Mount (SM)

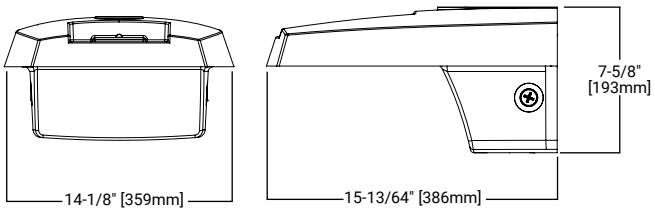

Wall Mount (WM)

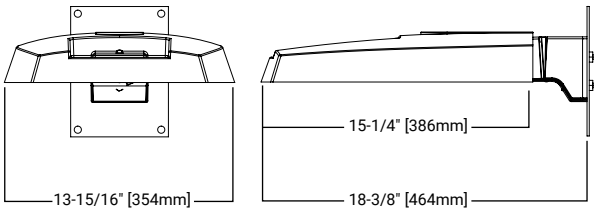

NOTES:
1. Visit https://www.designlights.org/search/ to confirm qualification. Not all product variations are DLC qualified.
2. IDA Certified for 3000K CCT and warmer only.

Ordering Information

SAMPLE NUMBER: **PRV-P-PA1B-740-U-T4W-SM-BZ**

Product Family [1]	Light Engine		Color Temperature	Voltage	Distribution	Mounting (Included)	Finish
	Configuration	Drive Current [2]					
PRV-P=Prevail Petite **BAA-PRV-P**=Prevail Petite BAA Compliant [23] **TAA-PRV-P**=Prevail Petite TAA Compliant [23]	**PA1**=1 Panel, 24 LED Rectangle	**A**=400mA Nominal **B**=700mA Nominal **C**=950mA Nominal **D**=1200mA Nominal	**740**=70CRI, 4000K **730**=70CRI, 3000K **750**=70CRI, 5000K	**U**=Universal, 120-277V **H**=High Voltage, 347-480V **9**=347V **8**=480V [3] **DV**=Duravolt, 277-480V [3, 24]	**T2R**=Type II Roadway **T2U**=Type II Urban **T3**=Type III **T4W**=Type IV Wide **5WQ**=Type V Square Wide	**SM**=Surface Wall Mount **WM**=Wall Mount Arm	**BZ**=Bronze **AP**=Grey **BK**=Black **DP**=Dark Platinum **GM**=Graphite Metallic **WH**=White

Options (Add as Suffix)

10K=10kV UL 1449 Fused Surge Protective Device
20MSP=20kV MOV Surge Protective Device
20K=20kV UL 1449 Fused Surge Protective Device
2L=Two-Circuit Light Engine [20]
EBP=Emergency Battery Pack (Ambient Temp, 0° to 40°C) [4, 5]
CBP=Cold Weather Emergency Battery Pack (Ambient Temp, -20° to 40°C) [4, 5]
CBP-CEC=Cold Weather Emergency Battery Pack, CEC Compliant (Ambient Temp, -20° to 40°C) [4, 5]
HSS=House Side Shield (Factory Installed) [6]
HA=50°C High Ambient Temperature [7]
CC=Coastal Construction [8]
BPC=Button Photocontrol [9]
PR=NEMA 3-PIN Twistlock Photocontrol Receptacle [9, 10]
PR7=NEMA 7-PIN Twistlock Photocontrol Receptacle [9, 10]
MS/DIM-L08=Dimming Motion and Daylight Sensor, IR Remote Programmable, < 8' Mounting [9, 11, 12]
MS/DIM-L20=Dimming Motion and Daylight Sensor, IR Remote Programmable, 8' - 20' Mounting [9, 11, 12]
MS/DIM-L40=Dimming Motion and Daylight Sensor, IR Remote Programmable, 21' - 40' Mounting [9, 11, 12]
SPB1=Dimming Motion and Daylight Sensor, Bluetooth Programmable, < 8' Mounting [9, 11, 13]
SPB2=Dimming Motion and Daylight Sensor, Bluetooth Programmable, 8' - 20' Mounting [9, 11, 13]
SPB4=Dimming Motion and Daylight Sensor, Bluetooth Programmable, 21' - 40' Mounting [9, 11, 13]
ZW=Wavelinx-enabled 4-PIN Twistlock Receptacle [9, 11, 14, 15]
ZD=SR Driver-enabled 4-PIN Twistlock Receptacle [9, 11, 14, 15]
ZW-SWPD4XX=WaveLinx Pro, Dimming Motion and Daylight, WAC Programmable, 7' - 15' Mounting [9, 11, 14, 15, 16]
ZW-SWPD5XX=WaveLinx Pro, Dimming Motion and Daylight, WAC Programmable, 15' - 40' Mounting [9, 11, 14, 15, 16]
ZD-SWPD4XX=WaveLinx Pro, SR Driver, Dimming Motion and Daylight, WAC Programmable, 7' - 15' Mounting [9, 11, 14, 15, 16]
ZD-SWPD5XX=WaveLinx Pro, SR Driver, Dimming Motion and Daylight, WAC Programmable, 15' - 40' Mounting [9, 11, 14, 15, 16]

Accessories (Order Separately) [18, 19]

HSS-HP=House Side Shield, Horizontal Panel [7]
OA/RA1013=Photocontrol Shorting Cap
OA/RA1014=NEMA Photocontrol - 120V
OA/RA1016=NEMA Photocontrol - Multi-Tap 105-285V
OA/RA1201=NEMA Photocontrol - 347V
OA/RA1027=NEMA Photocontrol - 480V
FSIR-100=Wireless Configuration Tool for Occupancy Sensor [21]
WOLC-7P-10A=WaveLinx Outdoor Control Module (7-PIN) [22]
SWPD4-XX=WaveLinx Wireless Sensor, 7' - 15' Mounting Height [15, 16, 17]
SWPD5-XX=WaveLinx Wireless Sensor, 15' - 40' Mounting Height [15, 16, 17]

NOTES:
1. DesignLights Consortium® Qualified. Refer to www.designlights.org Qualified Products List under Family Models for details.
2. Nominal drive currents shown here. For actual drive current by configuration, refer to Power and Lumens tables.
3. 480V not to be used with ungrounded or impedance grounded systems.
4. Only available on Surface Wall Mount (SM) mounting.
5. Must use with Univeral (U) voltage only. Not available with other voltage options. Not available with PA1D light engine.
6. House Side Shield not for use with 5WQ distribution.
7. Not available with EBP, CBP, or CBP-CEC options. Not available with PA1D light engine.
8. Salt spray tested to over 5,000-hours per ASTM B117 with a scribe rating of 9 per ASTM D1654. Also achieves 7,000-hour rating per ASTM B117 with a scribe rating of 4 per ASTM D1654. Extended lead times may apply.
9. Option is not available with other controls: photocontrols (BPC), photocontrol receptacles (PR or PR7), or controls systems (MS, ZD, or ZW).
10. If High Voltage (H) or DuraVolt (DV) is specified, use a photocontrol that matches the input voltage used.
11. Option not available with High Voltage (H). Must specify Universal (U), 347V (9), or 480V (8) voltage.
12. Utilizes the Wattstopper sensor FSP-211. Sensor color white unless specified otherwise via PDR. To field-configure, order FSIR-100 accessory separately.
13. Utilizes the Wattstopper sensor FSP-3XX series. Sensor color determined by product finish. See Sensor Color Reference Table. Field-configures via mobile application. See Controls section for details.
14. Sensor passive infrared (PIR) may be overly sensitive when operating below -20°C (-4°F).
15. In order for the device to be field-configurable, requires WAC Gateway components WAC-PoE and WPOE-120 in appropriate quantities. Only compatible with WaveLinx system and software and requires system components to be installed for operation. See website for more Wavelinx application information.
16. Replace XX with sensor color (WH, BZ or BK).
17. Requires 4-PIN twistlock receptacle option (ZD or ZW) option.
18. For BAA or TAA requirements, Accessories sold separately will be separately analyzed under domestic preference requirements. Consult factory for further information.
19. Replace XX with paint color.
20. Controls and/or emergency battery packs operate only one of the two circuits when 2L is specified.
21. This tool enables adjustment to Motion Sensor (MS) parameters including high and low modes, sensitivity, time delay, cutoff and more. Consult your lighting representative for more information.
22. Requires 7-PIN NEMA twistlock photocontrol receptacle (PR7) option. The WOLC-7 cannot be used in conjunction with other controls systems (MS, ZD, or ZW). Only for use at 120-347V.
23. Only product configurations with these designated prefixes are built to be compliant with the Buy American Act of 1933 (BAA) or Trade Agreements Act of 1979 (TAA), respectively. Please refer to DOMESTIC PREFERENCES website for more information. Components shipped separately may be separately analyzed under domestic preference requirements.
24. DuraVolt drivers feature added protection from power quality issues such as loss of neutral, transients and voltage fluctuations. Visit www.signify.com/duravolt for more information.

Mounting Details

Surface Mount Plate (SM)

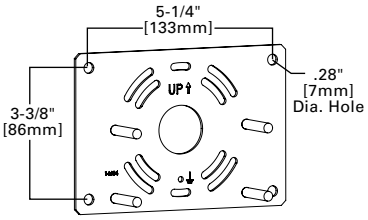

Surface Mount Assembly (SM)

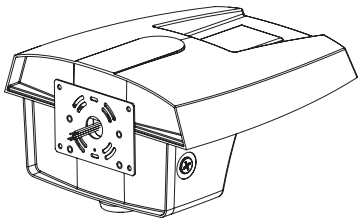

Wall Mount (WM)

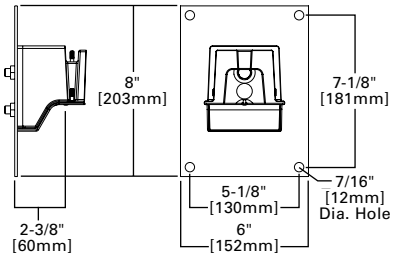

Product Specifications

Construction
- Single-piece die-cast aluminum housing
- Tethered die-cast aluminum door
- Surface Mount (SM) offers two 1/2" NPT conduit entry plugs
- Not suitable for inverted mount installation

Optics
- Dark Sky Approved (3000K CCT and warmer only)
- Precision molded polycarbonate optics

Electrical
- -40°C minimum operating temperature
- 40°C maximum operating temperature
- >.9 power factor
- <20% total harmonic distortion
- Class 1 electronic drivers have expected life of 100,000 hours with <1% failure rate
- 0-10V dimming driver is standard with leads external to the fixture
- Standard MOV surge protective device designed to withstand 10kV of transient line surge

Typical Applications
- Outdoor, Pedestrian Pathways, Building Entrances, Loading Docks, Perimeter Parking Lots

Finish
- Five-stage super TGIC polyester powder coat paint, 2.5 mil nominal thickness

Shipping Data
- Prevail Petite (with CBP): 21 lbs. (9.53 kgs.)

Warranty
- Five year limited warranty, consult website for details. www.cooperlighting.com/legal

Energy and Performance Data

Power and Lumens

Light Engine		PA1A	PA1B	PA1C	PA1D
Power (Watts)		31	53	72	93
Drive Current (mA)		375	670	930	1200
Input Current @ 120V (A)		0.26	0.44	0.60	0.78
Input Current @ 277V (A)		0.12	0.20	0.28	0.35
Input Current @ 347V (A)		0.10	0.17	0.23	0.29
Input Current @ 480V (A)		0.07	0.13	0.17	0.22
Distribution					
Type II Roadway	4000K/5000K Lumens	4,505	7,362	9,495	11,300
	BUG Rating	B1-U0-G1	B1-U0-G2	B1-U0-G2	B1-U0-G2
	Lumens per Watt	147	139	132	121
	3000K Lumens [1]	4,103	6,705	8,647	10,291
Type II Roadway w/ HSS	4000K/5000K Lumens	3,727	6,091	7,855	9,349
	BUG Rating	B0-U0-G1	B0-U0-G2	B0-U0-G2	B1-U0-G2
	Lumens per Watt	121	115	109	100
	3000K Lumens [1]	3,394	5,547	7,154	8,514
Type II Urban	4000K/5000K Lumens	4,496	7,347	9,476	11,277
	BUG Rating	B1-U0-G1	B2-U0-G2	B2-U0-G2	B3-U0-G3
	Lumens per Watt	146	139	131	121
	3000K Lumens [1]	4,095	6,691	8,630	10,271
Type II Urban w/ HSS	4000K/5000K Lumens	3,253	5,316	6,856	8,160
	BUG Rating	B1-U0-G1	B1-U0-G1	B1-U0-G2	B1-U0-G2
	Lumens per Watt	106	101	95	87
	3000K Lumens [1]	2,963	4,841	6,244	7,431
Type III	4000K/5000K Lumens	4,443	7,261	9,364	11,145
	BUG Rating	B1-U0-G1	B1-U0-G2	B2-U0-G2	B2-U0-G2
	Lumens per Watt	145	138	130	119
	3000K Lumens [1]	4,046	6,612	8,528	10,150
Type III w/ HSS	4000K/5000K Lumens	3,406	5,566	7,179	8,543
	BUG Rating	B0-U0-G1	B1-U0-G2	B1-U0-G2	B1-U0-G2
	Lumens per Watt	111	105	100	91
	3000K Lumens [1]	3,102	5,069	6,538	7,781
Type IV Wide	4000K/5000K Lumens	4,348	7,106	9,164	10,906
	BUG Rating	B1-U0-G2	B2-U0-G2	B2-U0-G2	B2-U0-G3
	Lumens per Watt	142	135	127	117
	3000K Lumens [1]	3,960	6,471	8,346	9,932
Type IV Wide w/ HSS	4000K/5000K Lumens	3,318	5,422	6,993	8,323
	BUG Rating	B0-U0-G1	B1-U0-G2	B1-U0-G2	B1-U0-G2
	Lumens per Watt	108	103	97	89
	3000K Lumens [1]	3,022	4,938	6,369	7,580
Type V Square Wide	4000K/5000K Lumens	4,497	7,349	9,478	11,280
	BUG Rating	B3-U0-G1	B3-U0-G2	B4-U0-G2	B4-U0-G2
	Lumens per Watt	146	139	131	121
	3000K Lumens [1]	4,095	6,693	8,632	10,273

NOTES:
1. For 3000K or HSS BUG Ratings, refer to published IES files.

Power and Lumens: Emergency Configurations

Light Engine		PA1A	PA1B	PA1C
Power (Watts) [1]		37	59	78
Input Current @ 120V (A)		0.33	0.52	0.68
Input Current @ 277V (A)		0.16	0.24	0.31
Distribution [2]				
Type II Roadway	4000K/5000K Lumens	2,035		
	3000K Lumens	1,853		
Type II Urban	4000K/5000K Lumens	2,030		
	3000K Lumens	1,849		
Type III	4000K/5000K Lumens	2,007		
	3000K Lumens	1,827		
Type IV Wide	4000K/5000K Lumens	1,964		
	3000K Lumens	1,788		
Type V Square Wide	4000K/5000K Lumens	2,031		
	3000K Lumens	1,849		

NOTES:
1. Power and current based on full power consumption while EBP or CBP is charging.
2. Estimated lumen outputs while luminaire is operating in emergency mode only at full charge.

Lumen Maintenance

Configuration	TM-21 Lumen Maintenance (50,000 Hours)	Theoretical L70 (Hours)
Up to 50°C	96.76%	> 663,000

Sensor Color Reference Table (SPBx)

Housing Finish	Sensor Color
AP=Grey	Grey
BZ=Bronze	Bronze
BK=Black	Black
DP=Dark Platinum	Grey
GM=Graphite Metallic	Black
WH=White	White

Lumen Multiplier

Ambient Temperature	Lumen Multiplier
0°C	1.02
10°C	1.01
25°C	1.00
40°C	0.99
50°C	0.97

Control Options

0-10V This fixture provides 0-10V dimming wire leads for use with a lighting control panel or other control method.

Photocontrol (PR and PR7) Photocontrol receptacles provide a flexible solution to enable "dusk-to-dawn" lighting by sensing light levels. Advanced control systems compatible with NEMA 7-PIN standards can be utilized with the PR7 receptacle.

Dimming Occupancy Sensor (SPB, MS/DIM-LXX and MS-LXX) These sensors are factory installed in the luminaire housing. When the SPB or MS/DIM sensor options are selected, the luminaire will dim down after five minutes of no activity detected. When activity is detected, the luminaire returns to full light output. When a sensor for ON/OFF operation (MS-LXX) is selected, the luminaire will turn off after five minutes of no activity. These occupancy sensors include an integral photocell for "dusk-to-dawn" control or "daylight harvesting." Factory default is enabled for the MS sensors and disabled for the SPB. SPB motion sensors require the Sensor Configuration mobile application by Wattstopper to change factory default dimming level, time delay, sensitivity and other parameters. Available for iOS and Android devices. The SPB sensor is factory preset to dim down to approximately 10% power with a time delay of five minutes.

For mounting heights up to 8' (-L08)

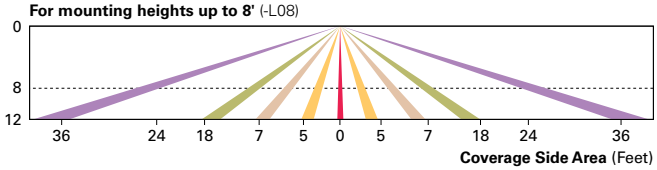

For mounting heights up to 20' (-L20)

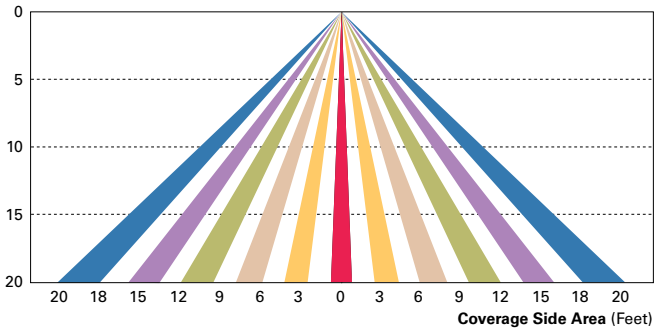

For mounting heights up to 40' (-L40W)

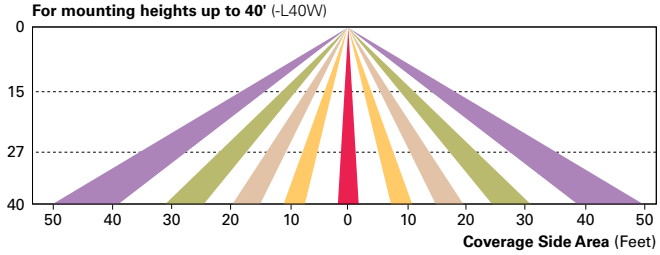

WaveLinx Wireless Control and Monitoring System Available in 7-PIN or 4-PIN configurations, the WaveLinx Outdoor control platform operates on a wireless mesh network based on IEEE 802.15.4 standards enabling wireless control of outdoor lighting. At least one Wireless Area Controller (WAC) is required for full functionality and remote communication (including adjustment of any factory pre-sets).

WaveLinx Outdoor Control Module (WOLC-7P-10A) A photocontrol that enables astronomic or time-based schedules to provide ON, OFF and dimming control of fixtures utilizing a 7-PIN receptacle. The out-of-box functionality is ON at dusk and OFF at dawn.

WaveLinx Wireless Sensor (SWPD4 and SWPD5) These outdoor sensors offer passive infrared (PIR) occupancy sensing and a photocell for closed-loop daylight sensing. These sensors can be factory installed or field-installed via simple, tool-less integration into luminaires equipped with the Zhaga Book 18 compliant 4-PIN receptacle (ZD or ZW). These sensors are factory preset to dim down to approximately 50 percent power after 15 minutes of no activity detected, and the photocell for "dusk-to-dawn" control is default enabled. A variety of sensor lenses are available to optimize the coverage pattern for mounting heights from 7'-40'.

For mounting heights from 16' to 40' (SWPD)

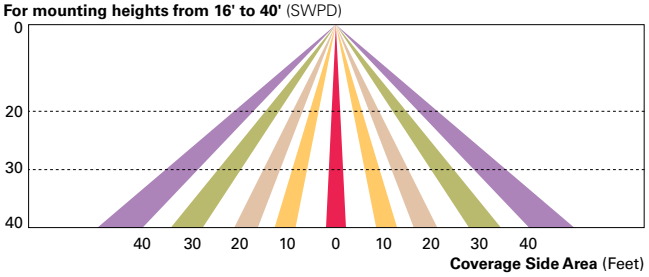

Cooper Lighting Solutions
1121 Highway 74 South
Peachtree City, GA 30269
P: 770-486-4800
www.cooperlighting.com

Datasheet: **TLC-LED-900 Luminaire and Driver**

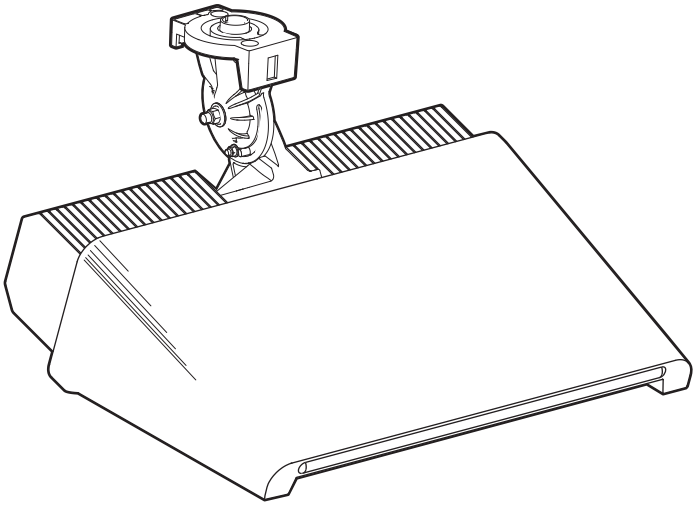

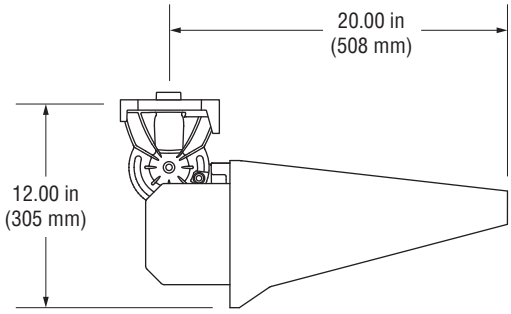

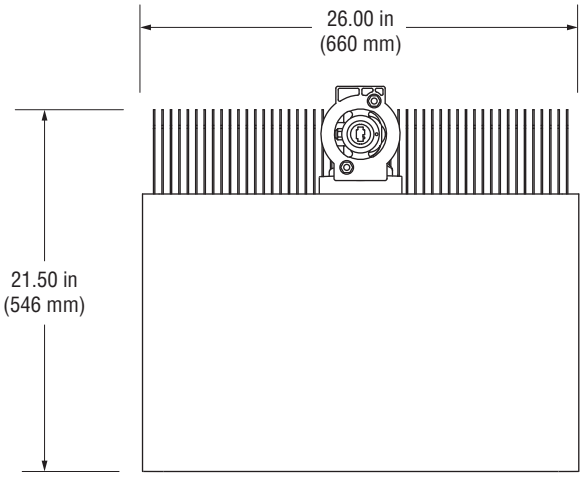

Luminaire Data

Weight (luminaire)	40 lb (18 kg)
UL listing number	E338094
UL listed for USA / Canada	UL1598 CSA-C22.2 No.250.0
CE Declaration	LVD, EMC, RoHS
Ingress protection, luminaire	IP65
Material and finish	Aluminum, powder-coat painted
Wind speed rating (aiming only)	150 mi/h (67 m/s)
UL, IEC ambient temperature rating, luminaire	50°C (122°F)

Photometric Characteristics

Projected lumen maintenance per IES TM-21-11	
L90 (13.5k)	>81,000 h
L80 (13.5k)	>81,000 h
L70 (13.5k)	>81,000 h
CIE correlated color temperature	5700 K
Color rendering index (CRI)	75 typ, 70 min
Lumens[1]	89,600

Footnotes:

1) Incorporates appropriate dirt depreciation factor for life of luminaire.

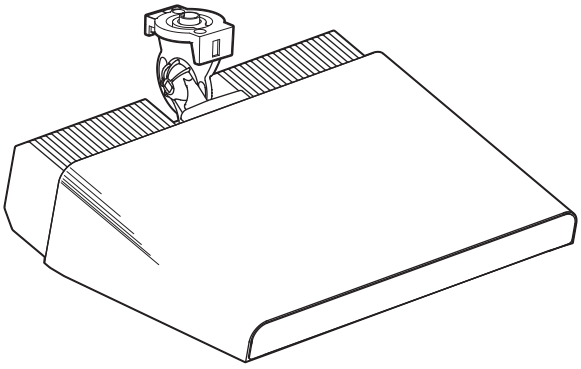

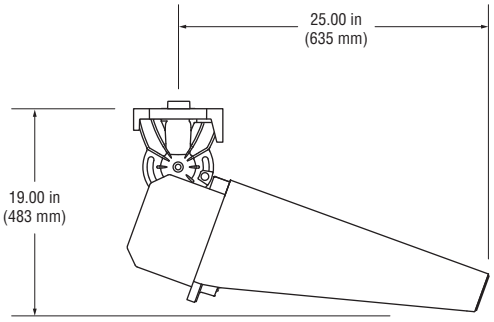

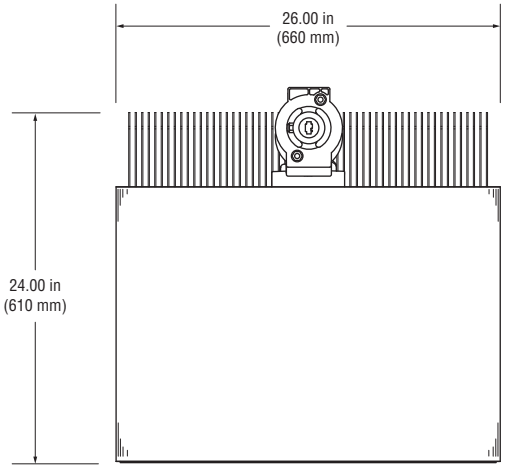

Luminaire Data

Weight (luminaire)	45 lb (20 kg)
UL listing number	E338094 (pending)
UL listed for USA / Canada	UL1598 CSA-C22.2 No.250.0 (pending)
CE Declaration	LVD, EMC, RoHS
Ingress protection, luminaire	IP65
Material and finish	Aluminum, powder-coat painted
Wind speed rating (aiming only)	150 mi/h (67 m/s)
UL, IEC ambient temperature rating, luminaire	50°C (122°F)

Photometric Characteristics

Projected lumen maintenance per IES TM-21-11	
L90 (13.5k)	>81,000 h
L80 (13.5k)	>81,000 h
L70 (13.5k)	>81,000 h
CIE correlated color temperature	5700 K
Color rendering index (CRI)	75 typ, 70 min
Lumens[1]	132,300

Footnotes:

1) Incorporates appropriate dirt depreciation factor for life of luminaire.

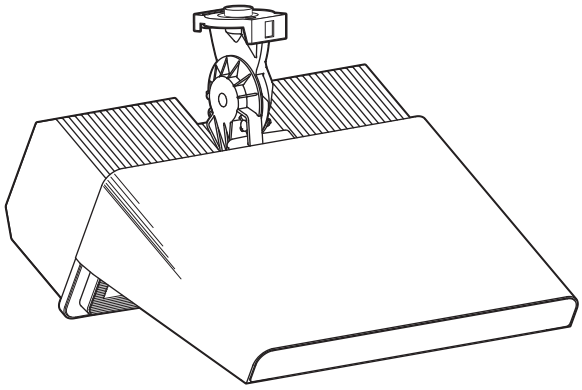

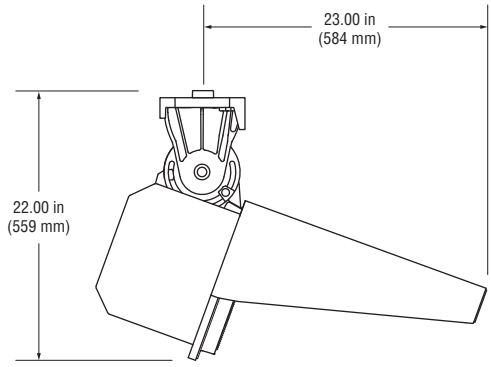

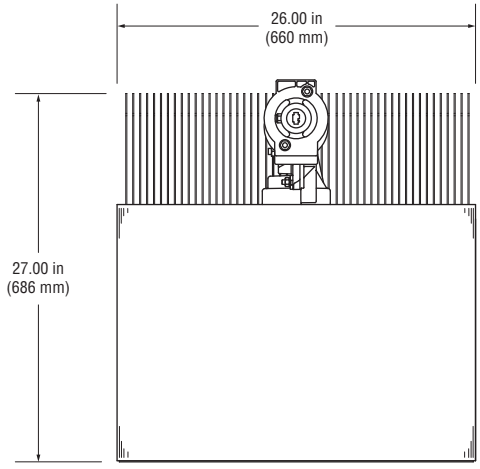

Luminaire Data

Weight (luminaire)	67 lb (30 kg)
UL listing number	E338094 (pending)
UL listed for USA / Canada	UL1598 CSA-C22.2 No.250.0 (pending)
CE Declaration	LVD, EMC, RoHS
Ingress protection, luminaire	IP65
Material and finish	Aluminum, powder-coat painted
Wind speed rating (aiming only)	150 mi/h (67 m/s)
UL, IEC ambient temperature rating, luminaire	50°C (122°F)

Photometric Characteristics

Projected lumen maintenance per IES TM-21-11	
L90 (13.5k)	>81,000 h
L80 (13.5k)	>81,000 h
L70 (13.5k)	>81,000 h
CIE correlated color temperature	5700 K
Color rendering index (CRI)	75 typ, 70 min
Lumens[1]	156,100

Footnotes:

1) Incorporates appropriate dirt depreciation factor for life of luminaire.

Total Light Control™– TLC-LED-400, TLC-LED-600, and TLC-LED-900 luminaires

Total Light Control™ – TLC-LED-1500 Luminaire