City of Richmond Department of Planning & Development Review

Location, Character, and Extent

LOCATION: 3101 Wharf St.

COUNCIL DISTRICT: 7

PROPOSAL: Final review of streetscape encroachments into the City right-of-way along Wharf St./Water St.

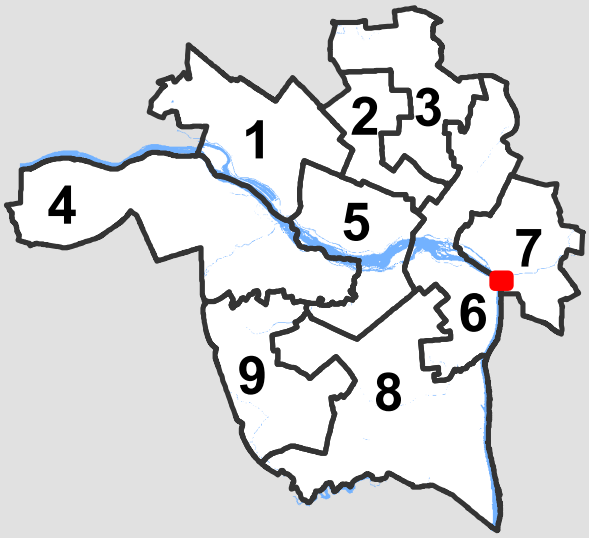

For questions, please contact Josh Son at 646-3741 or joshua.son@richmondgov.com

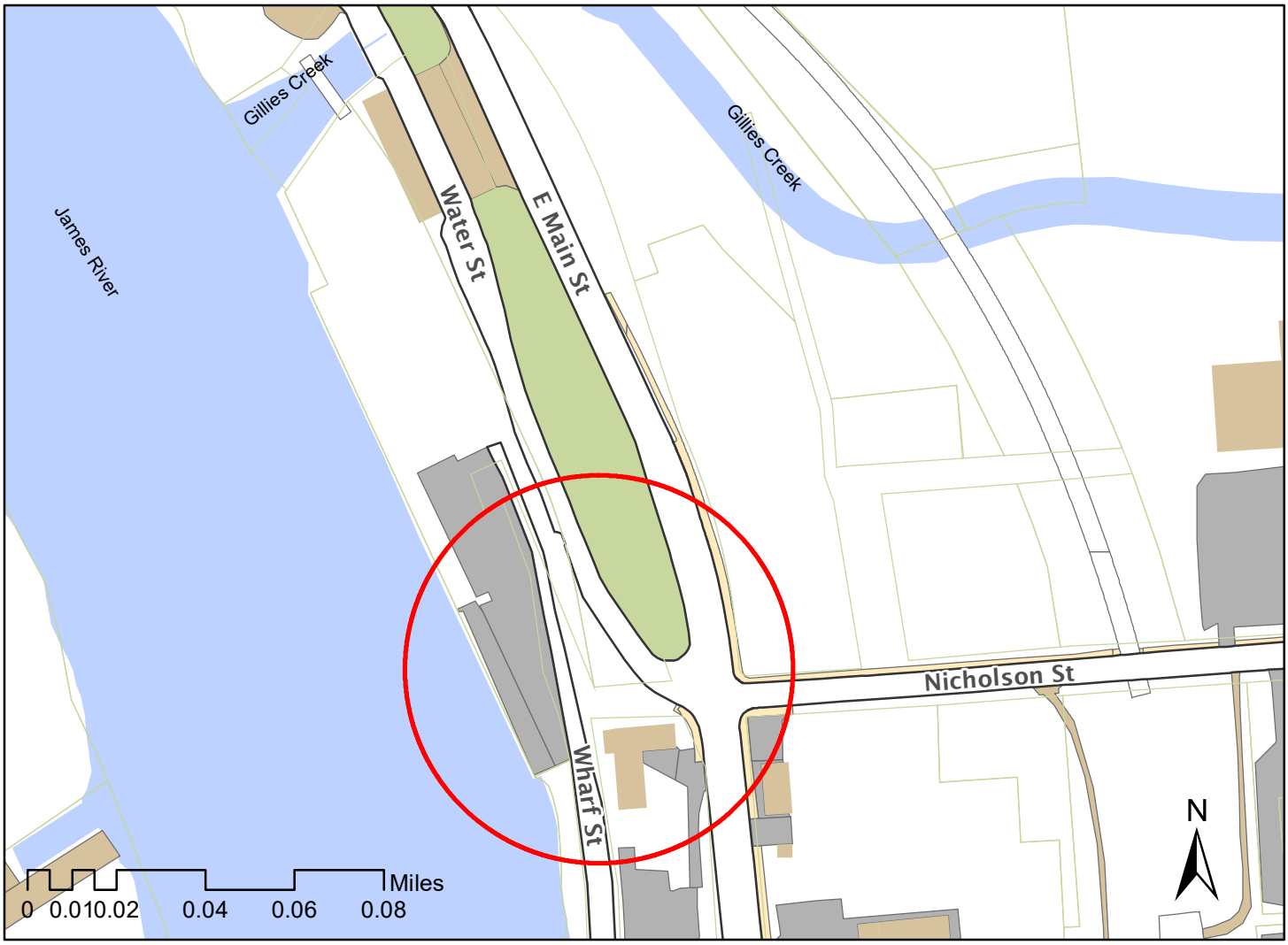

Application for URBAN DESIGN COMMITTEE Review

Department of Planning and Development Review
Planning & Preservation Division
900 E. Broad Street, Room 510
Richmond, Virginia 23219
(804) 646-6335
http://www.richmondgov.com/CommitteeUrbanDesign

Application Type

- [x] Addition/Alteration to Existing Structure
- [ ] New Construction
- [ ] Streetscape
- [ ] Site Amenity
- [ ] Encroachment
- [ ] Master Plan
- [ ] Sign
- [ ] Other

Review Type

- [ ] Conceptual
- [x] Final

Project Name: Intermediate Terminal Dock Phase 2 - Site Access

Project Address: 3101 Wharf St.; Richmond, VA

Brief Project Description (this is not a replacement for the required detailed narrative) :
Relocate current access drive to the Intermediate Terminal Dock site.

Applicant Information

(on all applications other than encroachments, a City agency representative must be the applicant)

Name: Don Summers Email: donald.summers@richmondgov.com

City Agency: Capital Projects Phone: 804-646-6614

Address: 900 East Broad Street, Suite 602; Richmond, VA

Main Contact (if different from Applicant): Travis Wolf

Company: AECOM Phone: 540-244-2517

Email: travis.wolf@aecom.com

Submittal Deadlines

All applications and support materials must be filed no later than 21 days prior to the scheduled meeting of the Urban Design Committee (UDC). Please see the schedule on page 3 as actual deadlines are adjusted due to City holidays. **Late or incomplete submissions will be deferred to the next meeting.**

Filing

Applications can be mailed or delivered to the attention of "Urban Design Committee" at the address listed at the top of this page. **It is important that the applicant discuss the proposal with appropriate City agencies, Zoning Administration staff, and area civic associations and residents prior to filing the application with the UDC.**

UDC Background

The UDC is a ten member committee created by City Council in 1968 whose purpose is to advise the City Planning Commission on the design of projects on City property or right-of-way. The UDC provides advice of an aesthetic nature in connection with the performance of the duties of the Commission under Sections 17.05, 17.06 and 17.07 of the City Charter. The UDC also advises the Department of Public Works in regards to private encroachments in the public right-of-way.

Application for URBAN DESIGN COMMITTEE Review

Department of Planning and Development Review
Planning & Preservation Division
900 E. Broad Street, Room 510
Richmond, Virginia 23219
(804) 646-6335
http://www.richmondgov.com/CommitteeUrbanDesign

Submission Requirements

• 10 copies of the application cover sheet and all support materials (see below), unless the application is for an encroachment, in which case only 6 copies are required. Plan sheets should be 11" x 17", folded to 8 1/2" x 11". If it is not possible to scale plans to these dimensions, please provide one set of larger, scaled plans.
• An electronic copy (PDF preferred) of all application materials, which can be burned to disc, emailed, or delivered by FTP.

All applications must include the attached cover sheet and the following support materials, as applicable to the project:

For Conceptual Review

• A detailed project narrative which includes the following: purpose of the project, project background, project budget and funding sources, description of construction program and estimated construction start date (description should also provide information on the surrounding area to provide context).
• A site plan for the project indicating site characteristics which include: building footprints, parking areas, pedestrian routes, recreation areas, open areas and areas of future expansion.
• A set of floor plans and elevations, as detailed as possible.
• A landscaping plan which shows the general location and character of plant materials and notes any existing tree to be removed.

For Final Review

• A detailed project narrative which includes the following: purpose of the project, project background, project budget and funding sources, description of construction program and estimated construction start date (description should also provide information on the surrounding area to provide context).
• A site plan for the project indicating site characteristics which include: building footprints, parking areas, pedestrian routes, recreation areas, open areas and areas of future expansion.
• A set of floor plans and elevations, as detailed as possible.
• A landscaping plan that includes a complete plant schedule, the precise location of all plant materials, and a landscape maintenance analysis. The plant schedule must show number, size and type of each planting proposed. If existing trees are to be removed, their size, type and location must be noted on the landscape plan.
• The location of all lighting units should be noted on a site plan, including wall-mounted, site and parking lot lighting. Other site details, such as benches, trash containers and special paving materials, should also be located. Include specification sheets for each item.
• Samples of all proposed exterior building materials, including but not limited to brick, mortar, shingles, siding, glass, paint and stain colors. When as actual sample cannot be provided, a product information sheet that shows the item or a photo of an existing item may be substituted.

Review and Processing

Once an application is received, it is reviewed by staff, who compiles a report that is sent to the UDC. A copy of the report and the meeting agenda will be sent to the applicant prior to the meeting. The applicant or a representative should be present at the UDC meeting or the application may be deferred to the next regularly scheduled meeting. It is also strongly suggested that a representative of the City Agency which will have final responsibility for the item be present at the meeting (if the applicant and the representative are not the same). Once the UDC recommends action on the application, it is automatically placed on the agenda for the next City Planning Commission (CPC) meeting. An exception to this is encroachment applications, recommendations for which are forwarded to the Department of Public Works. The applicant or a representative must be present at the CPC meeting or the application may be deferred to the next regularly scheduled meeting.

CITY OF RICHMOND
URBAN DESIGN COMMITTEE (UDC)

MEETING SCHEDULE

UDC Meetings	UDC Submission Deadlines	Anticipated Date of Planning Commission Following the UDC Meeting
December 7, 2017	November 9, 2017	December 18, 2017
January 4, 2018	December 7, 2017**	January 16, 2018[1]
February 8, 2018	January 18, 2018	February 20, 2018[2]
March 8, 2018	February 15, 2018	March 19, 2018
April 5, 2018	March 15, 2018	April 16, 2018
May 10, 2018	April 19, 2018	May 21, 2018
June 7, 2018	May 17, 2018	June 18, 2018
July 5, 2018	June 14, 2018	July 16, 2018
August 9, 2018	July 19, 2018	August 20, 2018[3]
September 6, 2018	August 16, 2018	September 17, 2018
October 4, 2018	September 13, 2018	October 15, 2018
November 8, 2018	October 18, 2018	November 19, 2018
December 6, 2018	November 15, 2018*	December 17, 2018[4]

[1] Monday, January 15, 2018 is a City of Richmond Holiday.
[2] Monday, February 19, 2018 is a City of Richmond Holiday.
[3] This August CPC Meeting may be canceled. If so, Planning Commission hearing would be Tuesday, September 4, 2018.
[4] This December CPC Meeting may be canceled. If so, Planning Commission hearing would be Monday, January 7, 2019.
** Moved forward to account for Winter Holiday Schedule

The Richmond Urban Design Committee (UDC) is a ten member advisory committee created by City Council in 1968. Its purpose is to advise the City Planning Commission on the design of City projects. The UDC reviews projects for appropriateness in "location, character and extent" and for consistency with the City's Master Plan and forwards recommendations to the Planning Commission. The UDC also advises the Department of Public Works in regards to private encroachments in the public right-of-way.

Regular meetings are scheduled for the Thursday after the first Monday of each month at 10:00 a.m. in the 5th floor conference room of City Hall. Special meetings are scheduled as needed.

For additional information, please contact the Planning and Preservation Division staff at (804) 646-3741 or joshua.son@richmondgov.com.

Intermediate Terminal Dock Phase 2 – Public Access

Project Purpose:

- With the abandoning of Dock St./Wharf St., and the conveying of property to Stone Brewery for the construction of the proposed Bistro and Beer Gardens, the City of Richmond needs to relocate the existing entrance to the Intermediate Terminal Dock so it does not encroach on property not owned by the City. The existing entrance will be demolished and reconstructed approximately 40 feet to the east of the current entrance. The new entrance will be reconstructed with the same details as the current entrance, i.e. cobblestone dividers on either side of the entrance, removable bollards installed, proper signage and markings installed for pedestrian/bike traffic.
- The new entrance road will switch from a dual lane access road to a single lane access road to the Dock. The new entrance design will include additional sidewalk on the North side of the road and new landscape plantings and trees.
- In addition, the project will also include the installation of a Water and Sewer transfer station that may be utilized by passenger cruise ships that are moored at the Eagle Dock facility.

Project Background:

- As part of the Riverfront Development Master Plan, the City of Richmond completed reconstruction work on the Intermediate Terminal Dock site. Additionally, Phase 1 of the project included the removal of the existing warehouse dock foundations that remained after the original buildings were torn down. As part of Phase 2, the City proposes to relocate the existing entrance to the Intermediate Terminal Dock site to maintain the entrance in the City's Right of Way.

Project Budget:

- The current budget for this project is set at $982,000 with the following breakdown provided for clarification
  - $673,000 – CIP money
  - $309,000 – Grant money from the "VPA to local port" program

Estimated Construction Start Date:

- The proposed start date for this Phase of the project is September, 2018. The project must be underway by December, 2018 in order to qualify for the use of the VPA to Local Port grant program.

Site Plans

Issued for	Permits
Date Issued	February 2, 2018
Latest Issue	June 22, 2018

Intermediate Terminal Dock

Phase 2 - Public Access

3101 Wharf Street
Richmond, Virginia

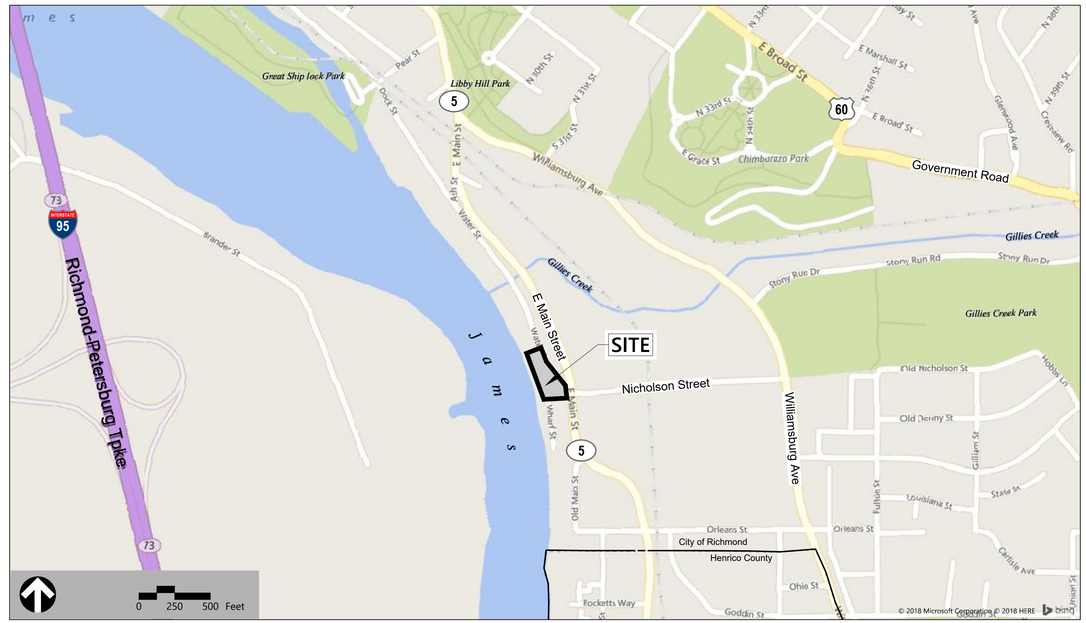

Owner

City of Richmond
Department of Public Works
900 East Broad Street, Suite 602
Richmond, Virginia 23219
804.646.6614

Applicant

VHB
115 South 15th Street, Suite 200
Richmond, Virginia 23219
804.343.7100

Parcel: E0000817001
Zoning: M-2, Heavy Industrial

Sheet Index

No.	Drawing Title	Latest Issue
C1.01	Legend and General Notes	June 22, 2018
C2.01	Existing Conditions Plan	June 22, 2018
C2.02	Demolition and Erosion and Sediment Control Plan Phase 1	June 22, 2018
C3.01	Layout and Materials Plan	June 22, 2018
C3.02	Utility Plan	June 22, 2018
C4.01	Grading and Drainage Plan	June 22, 2018
C5.01	Erosion and Sediment Control Plan Phase 2	June 22, 2018
C5.02	Erosion Control Notes	June 22, 2018
C5.03	City of Richmond Pollution Prevention Plan	June 22, 2018
C5.04	Erosion Control Details	June 22, 2018
C6.01-C6.05	Details	June 22, 2018
C7.01	Calculations and Profiles	June 22, 2018
C8.01	Drainage Area Maps	June 22, 2018

vhb.com

115 South 15th Street
Suite 200
Richmond, VA 23219
804.343.7100

COMMONWEALTH OF VIRGINIA
JOHN P. CARTY
Lic. No. 039452
6/22/18
PROFESSIONAL ENGINEER

VHB Project : 33965.20 Intermediate Terminal
Issued for : Permits 6/22/18

\\VHB\PROJ\RICHMOND\33965.20 INTERMED. TERM. PHASE II\CAD\LD\PLANSET\33965.20-CV 22 June 2018

Legend

Exist.	Prop.	
		PROPERTY LINE
		PROJECT LIMIT LINE
		RIGHT-OF-WAY/PROPERTY LINE
		EASEMENT
		BUILDING SETBACK
		PARKING SETBACK
10+00	10+00	BASELINE
		CONSTRUCTION LAYOUT
		ZONING LINE
		TOWN LINE
		LIMIT OF DISTURBANCE
		WETLAND LINE WITH FLAG
		FLOODPLAIN
BLSF		BORDERING LAND SUBJECT TO FLOODING
BZ		WETLAND BUFFER ZONE
NDZ		NO DISTURB ZONE
200'RA		200' RIVERFRONT AREA
		GRAVEL ROAD
EOP	EOP	EDGE OF PAVEMENT
BB	BB	BITUMINOUS BERM
BC	BC	BITUMINOUS CURB
CC	CC	CONCRETE CURB
	CG	CURB AND GUTTER
ECC	ECC	EXTRUDED CONCRETE CURB
MCC	MCC	MONOLITHIC CONCRETE CURB
PCC	PCC	PRECAST CONC. CURB
SGE	SGE	SLOPED GRAN. EDGING
VGC	VGC	VERT. GRAN. CURB
		LIMIT OF CURB TYPE
		SAWCUT
		BUILDING
	EN	BUILDING ENTRANCE
	LD	LOADING DOCK
		BOLLARD
D	D	DUMPSTER PAD
		SIGN
		DOUBLE SIGN
		STEEL GUARDRAIL
		WOOD GUARDRAIL
		PATH
		TREE LINE
		WIRE FENCE
		FENCE
		STOCKADE FENCE
		STONE WALL
		RETAINING WALL
		STREAM / POND / WATER COURSE
		DETENTION BASIN
		HAY BALES
		SILT FENCE
		SILT SOCK / STRAW WATTLE
4	4	MINOR CONTOUR
20	20	MAJOR CONTOUR
10	10	PARKING COUNT
	C10	COMPACT PARKING STALLS
DYL	DYL	DOUBLE YELLOW LINE
SL	SL	STOP LINE
		CROSSWALK
		ACCESSIBLE CURB RAMP
		ACCESSIBLE PARKING
VAN	VAN	VAN-ACCESSIBLE PARKING

Exist.	Prop.	
		CONCRETE
		HEAVY DUTY PAVEMENT
		BUILDINGS
		RIPRAP
		CONSTRUCTION EXIT
27.35 TC×	27.35 TC×	TOP OF CURB ELEVATION
26.85 BC×	26.85 BC×	BOTTOM OF CURB ELEVATION
132.75 ×	132.75 ×	SPOT ELEVATION
45.0 TW× 38.5 BW×	45.0 TW× 38.5 BW×	TOP & BOTTOM OF WALL ELEVATION
		BORING LOCATION
		TEST PIT LOCATION
MW	MW	MONITORING WELL
UD	UD	UNDERDRAIN
12"D	12"D	DRAIN
6"RD	6"RD	ROOF DRAIN
12"S	12"S	SEWER
FM	FM	FORCE MAIN
OHW	OHW	OVERHEAD WIRE
6"W	6"W	WATER
4"FP	4"FP	FIRE PROTECTION
	2"DW	DOMESTIC WATER
3"G	G	GAS
E	E	ELECTRIC
STM	STM	STEAM
T	T	TELEPHONE
FA	FA	FIRE ALARM
CATV	CATV	CABLE TV
		CATCH BASIN
		DOUBLE CATCH BASIN
		GUTTER INLET
		DRAIN MANHOLE
TD		TRENCH DRAIN
		PLUG OR CAP
CO	CO	CLEANOUT
		FLARED END SECTION
		HEADWALL
		SEWER MANHOLE
CS	CS	CURB STOP & BOX
WV	WV	WATER VALVE & BOX
TSV	TSV	TAPPING SLEEVE, VALVE & BOX
		SIAMESE CONNECTION
HYD	HYD	FIRE HYDRANT
WM	WM	WATER METER
PIV	PIV	POST INDICATOR VALVE
W	W	WATER WELL
GG	GG	GAS GATE
GM	GM	GAS METER
E	EMH	ELECTRIC MANHOLE
EM	EM	ELECTRIC METER
		LIGHT POLE
T	TMH	TELEPHONE MANHOLE
T	T	TRANSFORMER PAD
		UTILITY POLE
		GUY POLE
		GUY WIRE & ANCHOR
HH	HH	HAND HOLE
PB	PB	PULL BOX
Matchline		MATCHLINE

Abbreviations

General

ABAN	ABANDON
ACR	ACCESSIBLE CURB RAMP
ADJ	ADJUST
APPROX	APPROXIMATE
BIT	BITUMINOUS
BS	BOTTOM OF SLOPE
BWLL	BROKEN WHITE LANE LINE
CONC	CONCRETE
DYCL	DOUBLE YELLOW CENTER LINE
EL	ELEVATION
ELEV	ELEVATION
EX	EXISTING
FDN	FOUNDATION
FFE	FIRST FLOOR ELEVATION
GRAN	GRANITE
GTD	GRADE TO DRAIN
LA	LANDSCAPE AREA
LOD	LIMIT OF DISTURBANCE
MAX	MAXIMUM
MIN	MINIMUM
NIC	NOT IN CONTRACT
NTS	NOT TO SCALE
PERF	PERFORATED
PROP	PROPOSED
REM	REMOVE
RET	RETAIN
R&D	REMOVE AND DISPOSE
R&R	REMOVE AND RESET
SWEL	SOLID WHITE EDGE LINE
SWLL	SOLID WHITE LANE LINE
TS	TOP OF SLOPE
TYP	TYPICAL

Utility

CB	CATCH BASIN
CMP	CORRUGATED METAL PIPE
CO	CLEANOUT
DCB	DOUBLE CATCH BASIN
DMH	DRAIN MANHOLE
CIP	CAST IRON PIPE
COND	CONDUIT
DIP	DUCTILE IRON PIPE
FES	FLARED END SECTION
FM	FORCE MAIN
F&G	FRAME AND GRATE
F&C	FRAME AND COVER
GI	GUTTER INLET
GT	GREASE TRAP
HDPE	HIGH DENSITY POLYETHYLENE PIPE
HH	HANDHOLE
HW	HEADWALL
HYD	HYDRANT
INV	INVERT ELEVATION
I=	INVERT ELEVATION
LP	LIGHT POLE
MES	METAL END SECTION
PIV	POST INDICATOR VALVE
PWW	PAVED WATER WAY
PVC	POLYVINYLCHLORIDE PIPE
RCP	REINFORCED CONCRETE PIPE
R=	RIM ELEVATION
SMH	SEWER MANHOLE
TSV	TAPPING SLEEVE, VALVE AND BOX
UG	UNDERGROUND
UP	UTILITY POLE

Notes

General

1. CONTRACTOR SHALL CONTACT MISS UTILITY AT 811, 1-800-552-7100, OR HTTP://WWW.MISSUTILITYOFVIRGINIA.COM NO LESS THAN 72 HOURS PRIOR TO EXCAVATION AND SHALL NOT DISTURB THE SOIL UNTIL DIG TICKET HAS BEEN PROCESSED.
2. CONTRACTOR SHALL BE RESPONSIBLE FOR SITE SECURITY AND JOB SAFETY. CONSTRUCTION ACTIVITIES SHALL BE IN ACCORDANCE WITH OSHA STANDARDS, AND LOCAL REQUIREMENTS.
3. ACCESSIBLE ROUTES, PARKING SPACES, RAMPS, SIDEWALKS AND WALKWAYS SHALL BE CONSTRUCTED IN CONFORMANCE WITH THE FEDERAL AMERICANS WITH DISABILITIES ACT LATEST EDITION OF THE ADA STANDARDS FOR ACCESSIBLE DESIGN. CONTRACTOR MUST ALSO COMPLY WITH STATE AND LOCAL LAWS AND REGULATIONS (WHICHEVER ARE MORE STRINGENT).
4. AREAS DISTURBED DURING CONSTRUCTION AND NOT RESTORED WITH AN IMPERVIOUS SURFACE (PAVEMENT, GRAVEL, ETC.), BUT LEFT DORMANT FOR A PERIOD LONGER THAN 14 DAYS, SHALL APPLY SITE SPECIFIC TEMPORARY OR PERMANENT SEEDING MIXTURE. FOLLOW DETAIL PROVIDED BY VIRGINIA EROSION AND SEDIMENT CONTROL HANDBOOK STANDARD & SPECIFICATIONS 3.31 AND 3.32.
5. WORK WITHIN THE LOCAL RIGHT-OF-WAY SHALL CONFORM TO CITY OF RICHMOND STANDARDS.
6. UPON AWARD OF CONTRACT, CONTRACTOR SHALL MAKE NECESSARY CONSTRUCTION NOTIFICATIONS AND APPLY FOR AND OBTAIN NECESSARY PERMITS, AND POST BONDS ASSOCIATED WITH THE WORK INDICATED ON THE DRAWINGS, IN THE SPECIFICATIONS, AND IN THE CONTRACT DOCUMENTS. DO NOT CLOSE OR OBSTRUCT ROADWAYS, SIDEWALKS, AND FIRE HYDRANTS, WITHOUT APPROPRIATE PERMITS.
7. TRAFFIC SIGNAGE AND PAVEMENT MARKINGS SHALL CONFORM TO THE MANUAL OF UNIFORM TRAFFIC CONTROL DEVICES, UNLESS OTHERWISE INDICATED.
8. DAMAGE RESULTING FROM CONSTRUCTION LOADS AND AREAS OUTSIDE THE LIMITS OF PROPOSED WORK DISTURBED BY THE CONTRACTOR'S OPERATIONS SHALL BE RESTORED BY THE CONTRACTOR TO THEIR ORIGINAL CONDITION AT THE CONTRACTOR'S EXPENSE AS SOON AS PRACTICABLE.
9. IN THE EVENT THAT SUSPECTED CONTAMINATED SOIL, GROUNDWATER, AND OTHER MEDIA ARE ENCOUNTERED DURING EXCAVATION AND CONSTRUCTION ACTIVITIES BASED ON VISUAL, OLFACTORY, OR OTHER EVIDENCE, THE CONTRACTOR SHALL STOP WORK IN THE VICINITY OF THE SUSPECT MATERIAL TO AVOID FURTHER SPREADING OF THE MATERIAL, AND SHALL NOTIFY THE OWNER IMMEDIATELY SO THAT THE APPROPRIATE TESTING AND SUBSEQUENT ACTION CAN BE TAKEN.
10. CONTRACTOR SHALL PREVENT DUST, SEDIMENT, AND DEBRIS FROM EXITING THE SITE AND SHALL BE RESPONSIBLE FOR CLEANUP, REPAIRS AND CORRECTIVE ACTION IF SUCH OCCURS. CONTRACTOR SHALL DISPOSE OF DEBRIS IN ACCORDANCE WITH APPLICABLE FEDERAL, STATE, AND LOCAL REGULATIONS, ORDINANCES AND STATUS.
11. ALL EARTHWORK TO COMPLETE THE PROPOSED IMPROVEMENTS SHALL BE INCLUDED IN THE CONTRACT. THE CONTRACTOR IS RESPONSIBLE FOR MAINTAINING SITE/EXCAVATION STABILITY, DRAINAGE AND PROTECTION FROM FROST IN ALL EXCAVATION WORK.
12. CONTRACTOR SHALL CONTROL STORMWATER RUNOFF DURING CONSTRUCTION TO PREVENT ADVERSE IMPACTS TO OFF SITE AREAS, AND SHALL BE RESPONSIBLE TO REPAIR RESULTING DAMAGES, IF ANY, AT NO COST TO OWNER.
13. THIS PROJECT IS LOCATED WITHIN THE RMA, A DESIGNATED CHESAPEAKE BAY PRESERVATION AREA, AND DISTURBS MORE THAN 2,500 SQUARE FEET OF LAND. IT IS, THEREFORE, SUBJECT TO THE RICHMOND STORMWATER MANAGEMENT PROGRAM (RSMP), GENERAL CONSTRUCTION PERMIT (GCP) PROGRAM AS ADMINISTERED BY THE CITY OF RICHMOND, UNDER THE JURISDICTION OF THE VIRGINIA DEPARTMENT OF ENVIRONMENTAL QUALITY (DEQ) AND THE EPA. PRIOR TO THE START OF CONSTRUCTION, THE CONTRACTOR SHALL FILE A GCP NOTICE OF INTENT WITH THE CITY AND PREPARE A STORMWATER POLLUTION PREVENTION PLAN (SWPPP) IN ACCORDANCE WITH THE VSMP REGULATIONS.

Utilities

1. THE LOCATIONS, SIZES, AND TYPES OF EXISTING UTILITIES ARE SHOWN AS AN APPROXIMATE REPRESENTATION ONLY. THE OWNER OR IT'S REPRESENTATIVE(S) HAVE NOT INDEPENDENTLY VERIFIED THIS INFORMATION AS SHOWN ON THE PLANS. THE UTILITY INFORMATION SHOWN DOES NOT GUARANTEE THE ACTUAL EXISTENCE, SERVICEABILITY, OR OTHER DATA CONCERNING THE UTILITIES, NOR DOES IT GUARANTEE AGAINST THE POSSIBILITY THAT ADDITIONAL UTILITIES MAY BE PRESENT THAT ARE NOT SHOWN ON THE PLANS. PRIOR TO ORDERING MATERIALS AND BEGINNING CONSTRUCTION, THE CONTRACTOR SHALL VERIFY AND DETERMINE THE EXACT LOCATIONS, SIZES, AND ELEVATIONS OF THE POINTS OF CONNECTIONS TO EXISTING UTILITIES AND, SHALL CONFIRM THAT THERE ARE NO INTERFERENCES WITH EXISTING UTILITIES AND THE PROPOSED UTILITY ROUTES, INCLUDING ROUTES WITHIN THE PUBLIC RIGHT OF WAY.
2. WHERE AN EXISTING UTILITY IS FOUND TO CONFLICT WITH THE PROPOSED WORK, OR EXISTING CONDITIONS DIFFER FROM THOSE SHOWN SUCH THAT THE WORK CANNOT BE COMPLETED AS INTENDED, THE LOCATION, ELEVATION, AND/OR SIZE OF THE UTILITY SHALL BE ACCURATELY DETERMINED WITHOUT DELAY BY THE CONTRACTOR, AND THE INFORMATION FURNISHED IN WRITING TO THE OWNER'S REPRESENTATIVE FOR THE RESOLUTION OF THE CONFLICT AND CONTRACTOR'S FAILURE TO NOTIFY PRIOR TO PERFORMING ADDITIONAL WORK RELEASES OWNER FROM OBLIGATIONS FOR ADDITIONAL PAYMENTS WHICH OTHERWISE MAY BE WARRANTED TO RESOLVE THE CONFLICT.
3. SET CATCH BASIN RIMS, AND INVERTS OF SEWERS, DRAINS, AND DITCHES IN ACCORDANCE WITH ELEVATIONS ON THE GRADING AND UTILITY PLANS.
4. RIM ELEVATIONS FOR DRAIN AND SEWER MANHOLES, WATER VALVE COVERS, GAS GATES, ELECTRIC AND TELEPHONE PULL BOXES, AND MANHOLES, AND OTHER SUCH ITEMS, ARE APPROXIMATE AND SHALL BE SET/RESET AS FOLLOWS:
   - A. PAVEMENTS AND CONCRETE SURFACES: FLUSH
   - B. ALL SURFACES ALONG ACCESSIBLE ROUTES: FLUSH
   - C. LANDSCAPE, LOAM AND SEED, AND OTHER EARTH SURFACE AREAS: ONE INCH ABOVE SURROUNDING AREA AND TAPER EARTH TO THE RIM ELEVATION.
5. THE LOCATION, SIZE, DEPTH, AND SPECIFICATIONS FOR CONSTRUCTION OF PROPOSED PRIVATE UTILITY SERVICES SHALL BE INSTALLED ACCORDING TO THE REQUIREMENTS PROVIDED BY, AND APPROVED BY, THE RESPECTIVE UTILITY COMPANY (GAS, TELEPHONE, ELECTRIC, FIRE ALARM, ETC.). FINAL DESIGN LOADS AND LOCATIONS TO BE COORDINATED WITH OWNER AND ENGINEER.
6. CONTRACTOR SHALL MAKE ARRANGEMENTS FOR AND SHALL BE RESPONSIBLE FOR THE ALTERATION AND ADJUSTMENT OF GAS, ELECTRIC, TELEPHONE, FIRE ALARM, AND ANY OTHER PRIVATE UTILITIES, WHETHER WORK IS PERFORMED BY CONTRACTOR OR BY THE UTILITIES COMPANY.
7. UTILITY PIPE MATERIALS SHALL BE AS FOLLOWS, UNLESS OTHERWISE NOTED ON THE PLAN:
   - A. WATER LINES FOR FIRE PROTECTION SHALL BE DUCTILE IRON PIPE (DIP), WATER LINES FOR DOMESTIC USE SHALL BE DUCTILE IRON PIPE (DIP), CLASS 52, OR TYPE "K" COPPER, IN ACCORDANCE WITH CITY OF RICHMOND STANDARDS.
   - B. SANITARY SEWER PIPES SHALL BE SDR-35 POLYVINYL CHLORIDE (PVC) SEWER PIPE.
   - C. STORM DRAINAGE PIPES SHALL BE CLASS III RCP FOR SIZES 15" AND LARGER, AND SDR 35 PVC FOR SMALLER PIPES.
   - D. PIPE INSTALLATION AND MATERIALS SHALL COMPLY WITH THE STATE PLUMBING CODE WHERE APPLICABLE. CONTRACTOR SHALL COORDINATE WITH LOCAL PLUMBING INSPECTOR PRIOR TO BEGINNING WORK.
8. CONTRACTOR SHALL COORDINATE WITH ELECTRICAL CONTRACTOR AND SHALL FURNISH EXCAVATION, INSTALLATION, AND BACKFILL OF ELECTRICAL FURNISHED SITEWORK RELATED ITEMS SUCH AS PULL BOXES, CONDUITS, DUCT BANKS, LIGHT POLE BASES, AND CONCRETE PADS. SITE CONTRACTOR SHALL FURNISH CONCRETE ENCASEMENT OF DUCT BANKS IF REQUIRED BY THE UTILITY COMPANY AND AS INDICATED ON THE DRAWINGS.
9. ALL CONCRETE DRAINAGE AND SANITARY STRUCTURE INTERIOR DIAMETERS (4' MIN.) SHALL BE DETERMINED BY THE MANUFACTURER BASED ON THE PIPE CONFIGURATIONS SHOWN ON THESE PLANS AND LOCAL MUNICIPAL STANDARDS. FOR MANHOLES THAT ARE 20 FEET IN DEPTH AND GREATER, THE MINIMUM DIAMETER SHALL BE 5 FEET.
10. ALL DRAINAGE STRUCTURES 4 FEET AND GREATER IN DEPTH SHALL BE PROVIDED WITH MANHOLE STEPS WHICH COMPLY WITH VDOT STANDARD ST-1.
11. A UTILITY INSPECTOR SHALL BE ON SITE FOR ALL UTILITY INSTALLATIONS AND CONNECTIONS TO THE EXISTING SYSTEM.

Layout and Materials

1. DIMENSIONS ARE FROM THE FACE OF CURB, FACE OF BUILDING, FACE OF WALL, AND CENTER LINE OF PAVEMENT MARKINGS, UNLESS OTHERWISE NOTED.
2. CURB RADII ARE 5 FEET TO FACE OF CURB UNLESS OTHERWISE NOTED.
3. CURBING SHALL BE CITY OF RICHMOND STANDARD CONCRETE CURB, UNLESS OTHERWISE NOTED.
4. PRIOR TO START OF CONSTRUCTION, CONTRACTOR SHALL VERIFY EXISTING PAVEMENT ELEVATIONS AT INTERFACE WITH PROPOSED PAVEMENTS, AND EXISTING GROUND ELEVATIONS ADJACENT TO DRAINAGE OUTLETS TO ASSURE PROPER TRANSITIONS BETWEEN EXISTING AND PROPOSED FACILITIES.
5. ALL CONCRETE IF NOT SPECIFICALLY CALLED OUT SHALL BE A MINIMUM OF 3,000 PSI.
6. ALL AGGREGATE AND SUBGRADE WITHIN PAVED AREAS SHALL BE COMPACTED TO 95% COMPACTION PER STANDARD PROCTOR. LANDSCAPED AREAS SHALL BE 90% COMPACTED.
7. SYMBOLS AND LEGENDS OF PROJECT FEATURES ARE GRAPHIC REPRESENTATIONS AND ARE NOT NECESSARILY SCALED TO THEIR ACTUAL DIMENSIONS OR LOCATIONS ON THE DRAWINGS. THE CONTRACTOR SHALL REFER TO THE DETAIL SHEET DIMENSIONS, MANUFACTURERS' LITERATURE, SHOP DRAWINGS AND FIELD MEASUREMENTS OF SUPPLIED PRODUCTS FOR LAYOUT OF THE PROJECT FEATURES.
8. PER ADA ACCESSIBILITY REQUIREMENTS, ALL ACCESSIBLE ROUTES SHALL NOT EXCEED 5% LONGITUDINAL SLOPE AND 2% CROSS SLOPE.

Geotechnical Notes - For the City of Richmond DPW

1. ALL CONTROLLED FILL ZONES ARE TO BE MONITORED BY A FULL-TIME GEOTECHNICAL ENGINEERING SERVICES FIRM.
2. ENGINEERED FILLS SHALL BE PROPERLY PLACED ACCORDING TO THE RECOMMENDATIONS OF THE GEOTECHNICAL ENGINEER.
3. ALL SUMMARY REPORTS FROM THE GEOTECHNICAL ENGINEER REPRESENTING THE PROJECT MUST STATE HIS PROFESSINAL OPINION ON THE SATISFACTORILY COMPLETED PHASES OF CONSTRUCTION, SUCH AS; SLOPE CUTS, SUBDRAINAGE SYSTEMS, PREPARATION OF SUBGRADES AND COMPACTION OF EARTH FILLS.
4. NO FILLS SHALL HAVE ZONES THAT EXCEED TWO (2) FEET IN ELEVATION WITHOUT CONDUCTING COMPACTION TEST AND OBTAINING RESULTS OF 95% OR GREATER.
5. THE GEOTECHNICAL ENGINEER MUST SUBMIT A DETAILED ANALYSIS, ITEMIZING THE FIELD DENSITY TEST RESULTS. THIS REPORT SHALL BE ACCOMPANIED WITH A COPY OF THE SITE PLAN SHEET AND INDICATE THE TEST LOCATIONS AND ELEVATIONS. THE GEOTECHNICAL ENGINEER MUST PROVIDE ENOUGH DESIGNATED TESTING IN ALL FILL ZONES TO ADEQUATELY EXAMINE AND CERTIFY THE INTEGRITY OF THE FILL.
6. THE GEOTECHNICAL ENGINEER MUST SUBMIT A CERTIFIED BUILDING PAD REPORT FOR EACH FILL PAD LOCATION. THIS REPORT SHALL PROFILE THE FILL MATERIAL PLACEMENT AND PROVIDE THE COMPACTION TEST RESULTS. ALL REPORTS WILL BE ACCOMPANIED BY THE SITE PLAN, INDICATING THE TEST LOCATIONS AND ELEVATIONS.
7. NO BUILDING PADS IN FILL ZONES WILL HAVE STRATUMS EXCEEDING TWO (2) FEET IN ELEVATION WITHOUT TEST VERIFYING DENISTY.
8. THESE GEOTECHNICAL NOTES SHALL IN NO WAY LESSEN THE REQUIREMENTS OF THE SUBMITTED SOILS REPORT.

Road Subgrade

1. INSPECTION AND APPROVAL OF THE SUBGRADE WILL BE REQUIRED PRIOR TO THE PLACEMENT OF THE APPROVED PAVEMENT MATERIAL.
2. ANY CLAY DEPOSITS IN THE TOP TWO FEET OF THE SUBGRADE MUST BE REMOVED OR ADDRESSED AS RECOMMENDED BY THE GEOTECHNICAL ENGINEER.
3. SUBGRADE APPROVAL SHALL BE ACCOMPANIED BY THE SUPPORTING DOCUMENTATION VERIFYING DENSITY TEST RESULTS OF 95% OR GREATER.
4. THE ENTIRE SUBGRADE WILL HAVE BEEN PROOFROLLED IN THE PRESENCE OF THE SITE INSPECTOR AND GEOTECHNICAL REPRESENTATIVE. PROOFROLLING SHALL BE A RUBBER TIRE VEHICLE SUCH AS A LOADED TEN (10) TON TRUCK OR APPROVED COMPACTION EQUIPMENT.
5. THE FINAL SUBGRADE SHALL BE APPROVED BY THE GEOTECHNICAL ENGINEER AND SITE INSPECTOR BEFORE PLACEMENT OF PAVEMENT SECTION MATERIALS.

Construction Notes: City of Richmond DPW (Division of Right-of-Way)

1. ALL CUTS IN THE STREETS AND SIDEWALKS SHALL BE PERFORMED UNDER A PERMIT AND MONITORED BY THE PERMIT INSPECTOR.
2. WORK SHALL NOT COMMENCE UNTIL THE PERMIT INSPECTOR HAS BEEN NOTIFIED, A PRE-CONSTRUCTION CONFERENCE HELD AND MISS UTILITY CLEARS.
3. CUTS SHALL BE AS CLEAN AND STRAIGHT AS POSSIBLE, WITH NO OUTLINE DIMENSIONS LESS THAN 3 FEET WITHOUT SPECIAL APPROVAL OF THE DEPARTMENT'S INSPECTOR.
4. THE DETAILS OF TRENCHING CUTS FOR UTILITY STRIPS MUST BE SHOWN IN A TYPICAL SECTION ON THE DRAWINGS OR PROVIDED IN A SUBMITTAL WITH CONSTRUCTION NOTES SPECIFYING WIDTHS, DEPTHS, METHODS, MATERIALS, COMPACTION REQUIREMENTS AND PAVEMENT RESTORATION OR ABIDING BY THE DPW ATTACHMENT STANDARD.
5. ALL ASPHALT PAVEMENT RESTORATION THICKNESS SHALL BE 1-1/2 TIMES THE EXISTING SECTION OR A MINIMUM OF 8-INCHES WHICHEVER IS GREATER. SEE THE DPW TRENCH RESTORATION ILLUSTRATION FOR THE TYPICAL CONFORMANCE STANDARDS.
6. THE FINAL RESTORATION ON OPEN TRENCH CUTS REQUIRES THE DISTURBED ASPHALT PAVEMENT ZONE TO BE A SQUARE POINTED OFF AND STRAIGHT LINE. THE AREA OF PAVEMENT RESTORATION IS TO BE FULLY ENVELOPED BY THE FINAL SURFACE COURSE REPAIRS. THE ADJOINING SURFACE/TOP COURSE LAYER IS TO BE OVER-MILLED A MINIMUM DEPTH OF 1.25 INCHES OR MORE, A MINIMUM DISTANCE OF ONE FOOT BEYOND EACH SIDE OF THE TRENCH WALL. THIS STEP OUT IS TO OCCUR ALONG THE ENTIRE TRENCH LINE RUN AND/OR SQUARED POINTED AREA. CUTS INVOLVING CONTINUOUS NETWORK RUNS, WHICH EXCEED 350 FEET IN LENGTH OR TYPICALLY OVER ONE FULL CITY BLOCK, WILL BE CONSIDERED MULTIPLE BLOCK CUTS. ON MULTIPLE BLOCK CUT ZONES, THE OVER MILLING OF THE TRENCH LINE AND ADJOINING SURFACE COURSE LAYER MUST BE DONE WITH TYPICAL HIGH PRODUCTION ROADWAY COLD PLANNING EQUIPMENT. IN MULTIPLE BLOCK RESTORATION CASES, WHERE THE HIGH PRODUCTION COLD PLANNER IS REQUIRED, FINAL PAVING SHALL BE DONE BY A HIGH PRODUCTION HIGHWAY PAVER.
7. PERMITTEE MUST PROVIDE AND COORDINATE THE NECESSARY GEOTECHNICAL SERVICES FROM A QUALIFIED FIRM TO INSURE COMPACTION APPROVAL. APPROVAL OF IN-PLACE MATERIAL MUST BE FOLLOWED UP WITH A WRITTEN SUMMARY REPORT. COMPACTION REQUIREMENTS WILL BE REVIEWED FOR APPROVAL BY THE PERMITS ENGINEER OR HIS REPRESENTATIVES.
8. ALL DISTURBED SIDEWALK AND CURB SHALL BE REPAIRED AND REPLACED IN ACCORDANCE WITH CITY STANDARDS.
9. ALL UTILITY CUTS AND INSTALLATIONS ARE TO BE EXAMINED, INSPECTED, AND APPROVED BY THE APPROPRIATE UTILITY INSPECTOR/REPRESENTATIVE.
10. ALL ENCROACHMENTS MUST BE SATISFIED BY ORDINANCE.

Pavement Design

1. RESIDENTIAL - THE REQUIRED DESIGN THICKNESS OF THE AGGREGATE BASE (6", 21A), BASE COURSE ASPHALT (3.5",BM-2) AND SURFACE COURSE ASPHALT (2",SM-2A) ARE SHOWN IN THE STREET STANDARDS ILLUSTRATIONS. PAVEMENT SECTION DESIGN THICKNESS IS BASED ON A CBR VALUE OF TEN AND MAY BE INCREASED OR DECREASED AS ALLOWED BY THE STANDARDS. IT SHALL NOT BE DECREASED BELOW THE CITY OF RICHMOND'S MINIMUM DESIGN STANDARD OF 6 INCHES OF 21A AGGREGATE BASE, 2 INCHES OF SM-2A BASE COURSE ASPHALT AND 1.5 INCHES OF SM-2A SURFACE/TOP COURSE ASPHALT.
2. ALTERNATE EQUIVALENT PAVEMENT SECTIONS MAY BE SUBSTITUTED FOR THOSE CALLED FOR IN THE STANDARDS. THE APPROVAL PROCEDURES CALL FOR A QUALIFIED PAVEMENT ENGINEER TO REFERENCE AND FOLLOW THE ESTABLISHED VIRGINIA DEPARTMENT OF TRANSPORTATION GUIDELINES IN THEIR PAMPHLET ENTITLED, "PAVEMENT DESIGN GUIDE FOR SUBDIVISION AND SECONDARY ROADS", YEAR 2000 EDITION, AS AMENDED. ALTERNATE PAVEMENT SECTIONS MUST BE PRE-APPROVED BY THE DPEARTMENT OF PULBIC WORKS, RIGHT OF WAY MANAGER. NOTE THE MINIMUM CITY OF RICHMOND RESIDENTIAL PAVEMENT SECTION DESCRIBED ABOVE.
3. NON-RESIDENTIAL STREET PAVEMENT SECTIONS MUST MEET THE MINIMUM DESIGN THICKNESS OF 8 INCHES OF 21A BASE AGGREGATE, 6 INCHES BM-2 BASE COURSE ASPHALT AND 2 INCHES OF SM-2A SURFACE COURSE ASPHALT. ANY REQUESTED REDUCTIONS IN THIS DESIGN MUST BE FULLY SUPPORTED BY A COMPREHENSIVE ENGINEERING ANALYSIS.
4. NO REDUCTIONS IN THE MINIMUM PAVEMENT SECTION DESIGN THICKNESS (8 INCHES 21A BASE AGGREGATE, 6 INCHES BM-2 BASE COURSE ASPHALT AND 2 INCHES OF SM-2A SURFACE COURSE ASPHALT) WILL BE CONSIDERED IN THE DOWNTOWN, ARTERIAL STREETS, MAJOR COLLECTORS AND/OR ANY OTHER MAJOR CONNECTION STREETS.
5. DESIGNATED DOWNTOWN AREAS, HEAVY COMMERCIAL ZONES, PARTICULARLY HIGH VOLUME BUS ROUTES, TURNING LANES, BUS BAYS AND MAJOR INDUSTRIAL ZONES WILL REQUIRE A HEAVY DUTY PAVEMENT SECTIONS. HEAVY DUTY IS DESCRIBED AS A MINIMUM OF 8 INCHES OF 21A AGGREGATE BASE, WITH 8 INCHES OF BM-2 BASE COURSE ASPHALT AND 2 INCHES OF SM-2A SURFACE COURSE ASPHALT. NO REDUCTIONS OF THIS PAVEMENT SECTION WILL BE ALLOWED IN SO DESIGNATED ZONES.
6. AS PER DIRECTION OF THE PERMITS ENGINEER, RIGHT OF WAY MANAGER OR THE DIRECTOR, THE PUBLIC WORKS PERMITTING REQUIREMENTS MAY DESIGNATE SPECIFIC ANTI-RUTTING TYPES OF ASPHALT MIX DESIGNS REQUIREMENTS (I.E. SM-2D/SM-2E) THAT WILL BETTER SUIT PROBLEM CONDITIONS AND/OR BETTER SERVE LOCATIONS WITH CERTAIN TYPES AND VOLUMES OF TRAFFIC.

vhb.com
115 South 15th Street
Suite 200
Richmond, VA 23219
804.343.7100

Intermediate Terminal Phase 2 - Public Access

3101 Wharf Street
Richmond, Virginia

No.	Revision	Date	Appvd.

Designed by | Checked by

Issued for: Permitting
Date: June 22, 2018

Drawing Title: Legend and General Notes

Drawing Number: C1.01

Sheet of

Project Number: 33965.20

COMMONWEALTH OF VIRGINIA
JOHN P. CARTY
Lic. No. 039452
6/22/18
PROFESSIONAL ENGINEER

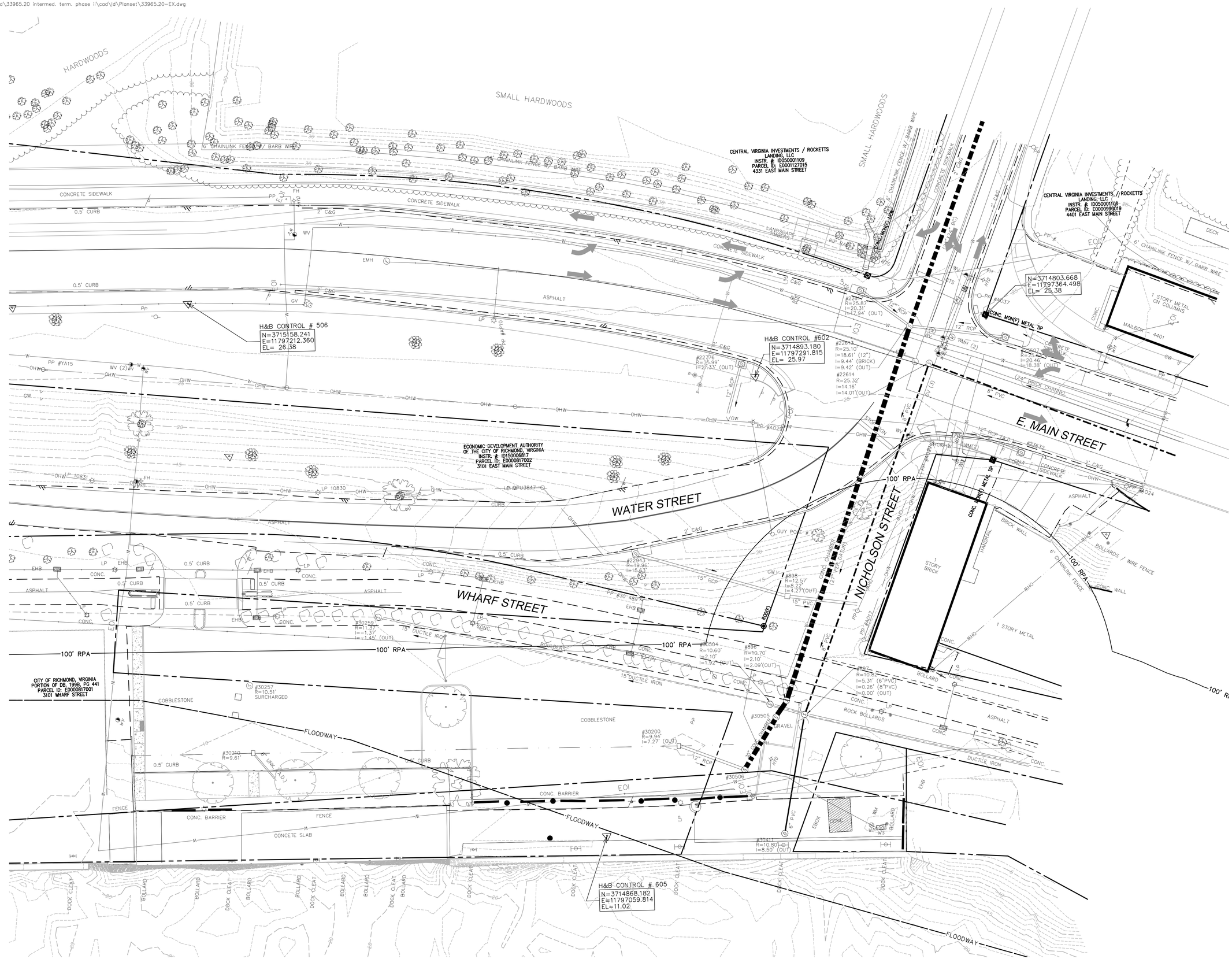

vhb.com

115 South 15th Street
Suite 200
Richmond, VA 23219
804.343.7100

H&B NOTES

1. INVERTS FOR PIPES AND STRUCTURES SHOWN HEREON ARE BASED ON FIELD MEASUREMENTS, HOWEVER THEY SHOULD BE VERIFIED PRIOR TO CONSTRUCTION.
2. PIPE SIZES, MATERIAL TYPE AND INVERT ELEVATIONS AS INDICATED ARE BASED UPON OBSERVATIONS MADE ABOVE GROUND. NO MEASUREMENTS HAVE BEEN PERFORMED BY PERSONNEL IN A CONFINED SPACE SITUATION.
3. EXISTING GROUND SURFACE LOCATION PERFORMED BY CONVENTIONAL INSTRUMENT SURVEY.
4. HORIZONTAL (NAD'83) AND VERTICAL (NAVD'88) DATUM ESTABLISHED THROUGH REAL TIME KINEMATIC (RTK) GPS OBSERVATIONS ON SEPTEMBER 28, 2016. DIFFERENTIAL CORRECTIONS WERE DERIVED FROM NATIONAL GEODETIC SURVEY (NGS) CONTINUALLY OPERATING REFERENCE STATION (CORS) "LOY3". COORDINATE VALUES, IF SHOWN HEREON, ARE BASED ON VIRGINIA STATE GRID, SOUTH ZONE.
5. UNDERGROUND UTILITIES WERE DESIGNATED BY ACCUMARK, INC. UTILITY INFORMATION ON THIS DRAWING WILL NEED TO BE FIELD VERIFIED PRIOR TO CONSTRUCTION. INDIVIDUALS ARE REQUIRED BY VIRGINIA LAW TO CONTACT MISS UTILITY OF VIRGINIA AT 1-800-552-7001 (OR 811) 2 BUSINESS DAYS (48 HOURS) PRIOR TO CONSTRUCTION OR EXCAVATION ACTIVITIES.
6. THE PROPERTY SHOWN HEREON FALLS IN THE FOLLOWING FLOOD HAZARD ZONE: "AE (SHADED) - SPECIAL FLOOD HAZARD AREA SUBJECT TO INUNDATION BY THE 1% ANNUAL CHANCE FLOOD PLAIN, AND FLOODWAY AREA ZONE AE (HATCHED & SHADED) AS SCALED GRAPHICALLY FROM FEMA FLOOD INSURANCE RATE MAP. MAP NUMBER 51012590043E, EFFECTIVE DATE: JULY 16, 2014.
7. PROPERTY LINES SHOWN HEREON TAKEN FROM COURT HOUSE RECORDS AND EVIDENCE OF MONUMENTATION AND OCCUPATION FOUND IN THE FIELD. THIS SURVEY DOES NOT CONSTITUTE A BOUNDARY SURVEY AND WAS PREPARED WITHOUT THE BENEFIT OF A TITLE COMMITMENT. THEREFORE ALL EASEMENTS MAY NOT BE SHOWN ON THIS SURVEY.
8. THIS TOPOGRAPHIC SURVEY WAS COMPLETED UNDER THE DIRECT AND RESPONSIBLE CHARGE OF LESLIE R. BYRNSIDE, LS. FROM AN ACTUAL GROUND SURVEY MADE UNDER HIS SUPERVISION. THE IMAGERY AND/OR ORIGINAL DATA WAS OBTAINED ON SEPTEMBER 28, 2016. THIS PLAT, MAP, OR DIGITAL GEOSPATIAL DATA INCLUDING METADATA MEETS MINIMUM ACCURACY STANDARDS UNLESS OTHERWISE NOTED.

VHB NOTES

1. FEATURES SHOWN AS FADED ARE BASED ON DESIGN DOCUMENTS PROVIDED BY THE OWNER. THESE IMPROVEMENTS WERE INSTALLED AFTER THE GROUND SURVEY AND ARE NOT WARRANTED TO BE EXACT. REFER TO "EAST RIVERFRONT TRANSPORTATION IMPROVEMENT" AND "INTERMEDIATE TERMINAL PARKING LOT IMPROVEMENTS" PLANS. CONTRACTOR SHALL FIELD VERIFY THESE IMPROVEMENTS AND REPORT TO ENGINEER ANY CHANGES.
2. ENVIRONMENTAL BUFFERS SUCH AS THE FLOODWAY AND CHESAPEAKE BAY RESOURCE PROTECTION AREA (RPA)100' BUFFER SHOWN HERE ARE BASED ON CITY OF RICHMOND GIS.
3. IT SHALL BE THE RESPONSIBILITY OF THE CONTRACTOR TO PRESERVE ALL EXISTING RIGHT-OF-WAY AND PROPERTY LINE MARKERS. ANY MARKERS DAMAGED OR LOST SHALL BE REPLACED AT THE CONTRACTOR'S EXPENSE BY A REGISTERED LICENSED SURVEYOR CERTIFIED TO WORK IN THE COMMONWEALTH OF VIRGINIA. ANY GRADE OR CONTROL STAKES DAMAGED OR LOST SHALL BE REPLACED AT THE CONTRACTOR'S EXPENSE.

0 10 20 40 Feet

Intermediate Terminal Phase 2 - Public Access

3101 Wharf Street
Richmond, Virginia

No.	Revision	Date	Appvd.

Designed by | Checked by

Issued for: Permitting

Date: June 22, 2018

Drawing Title: Existing Conditions Plan

COMMONWEALTH OF VIRGINIA
JOHN P. CARTY
Lic. No. 039452
6/22/18
PROFESSIONAL ENGINEER

Drawing Number: C2.01

Sheet of

Project Number: 33965.20

Saved Tuesday, June 19, 2018 9:33:38 AM BRUIZ Plotted Friday, June 22, 2018 4:49:59 PM Vaughan, Charlie

Demolition Notes

1. CONTRACTOR SHALL REMOVE AND DISPOSE OF MANMADE SURFACE FEATURES WITHIN THE LIMIT OF WORK AS SHOWN AND NOTED ON THESE PLANS.
2. THE LOCATIONS OF EXISTING UNDERGROUND UTILITIES SHOWN ON THIS PLAN ARE BASED ON THE CITY OF RICHMOND UTILITY INFORMATION, ON-THE-GROUND SURVEY, OWNER OBSERVATIONS, AND FROM SUBUTILITY CONTRACTOR FIELD DESIGNATIONS. THEY ARE NOT WARRANTED TO BE EXACTLY LOCATED NOR IS IT WARRANTED THAT ALL UNDERGROUND UTILITIES OR OTHER STRUCTURES ARE SHOWN ON THIS PLAN. CONTRACTOR SHALL FIELD VERIFY EXISTING CONDITIONS; CONTACT A/E IF ACTUAL CONSTRUCTION VARIES FROM PLANS.
3. EXISTING UTILITIES SHALL BE TERMINATED, UNLESS OTHERWISE NOTED, IN CONFORMANCE WITH LOCAL, STATE AND INDIVIDUAL UTILITY COMPANY STANDARD SPECIFICATIONS AND DETAILS. THE CONTRACTOR SHALL COORDINATE UTILITY SERVICE DISCONNECTS WITH THE UTILITY REPRESENTATIVES.
4. CONTRACTOR SHALL DISPOSE OF DEMOLITION DEBRIS IN ACCORDANCE WITH APPLICABLE FEDERAL, STATE AND LOCAL REGULATIONS, ORDINANCES AND STATUTES.
4 THE DEMOLITION LIMITS DEPICTED IN THE PLANS IS INTENDED TO AID THE CONTRACTOR DURING THE BIDDING AND CONSTRUCTION PROCESS AND IS NOT INTENDED TO DEPICT EACH AND EVERY ELEMENT OF DEMOLITION. THE CONTRACTOR IS RESPONSIBLE FOR IDENTIFYING THE DETAILED SCOPE OF DEMOLITION BEFORE SUBMITTING ITS BID/PROPOSAL TO PERFORM THE WORK AND SHALL MAKE NO CLAIMS AND SEEK NO ADDITIONAL COMPENSATION FOR CHANGED CONDITIONS OR UNFORESEEN OR LATENT SITE CONDITIONS RELATED TO ANY CONDITIONS DISCOVERED DURING EXECUTION OF THE WORK.
5. UNLESS OTHERWISE SPECIFICALLY PROVIDED ON THE PLANS OR IN THE SPECIFICATIONS, THE ENGINEER HAS NOT PREPARED DESIGNS FOR AND SHALL HAVE NO RESPONSIBILITY FOR THE PRESENCE, DISCOVERY, REMOVAL, ABATEMENT OR DISPOSAL OF HAZARDOUS MATERIALS, TOXIC WASTES OR POLLUTANTS AT THE PROJECT SITE. THE ENGINEER SHALL NOT BE RESPONSIBLE FOR ANY CLAIMS OF LOSS, DAMAGE, EXPENSE, DELAY, INJURY OR DEATH ARISING FROM THE PRESENCE OF HAZARDOUS MATERIAL AND CONTRACTOR SHALL INDEMNIFY AND HOLD HARMLESS THE ENGINEER FROM ANY CLAIMS MADE IN CONNECTION THEREWITH. MOREOVER, THE ENGINEER SHALL HAVE NO ADMINISTRATIVE OBLIGATIONS OF ANY TYPE WITH REGARD TO ANY CONTRACTOR AMENDMENT INVOLVING THE ISSUES OF PRESENCE, DISCOVERY, REMOVAL, ABATEMENT OR DISPOSAL OF ASBESTOS OR OTHER HAZARDOUS MATERIALS.
6. ALL PUBLIC AND PRIVATE UTILITIES TO ADJACENT PROPERTIES, INCLUDING CABLE TV, FIBER OPTIC, GAS, ELECTRICAL, WATER, AND SEWER SERVICES, SHALL BE MAINTAINED AND PROTECTED AT ALL TIMES.
7. CONTRACTOR TO PROVIDE COMPLETE MAINTENANCE OF TRAFFIC PLAN IN ACCORDANCE WITH CITY OF RICHMOND STANDARDS. COORDINATE WITH DEPARTMENT OF PUBLIC WORKS.

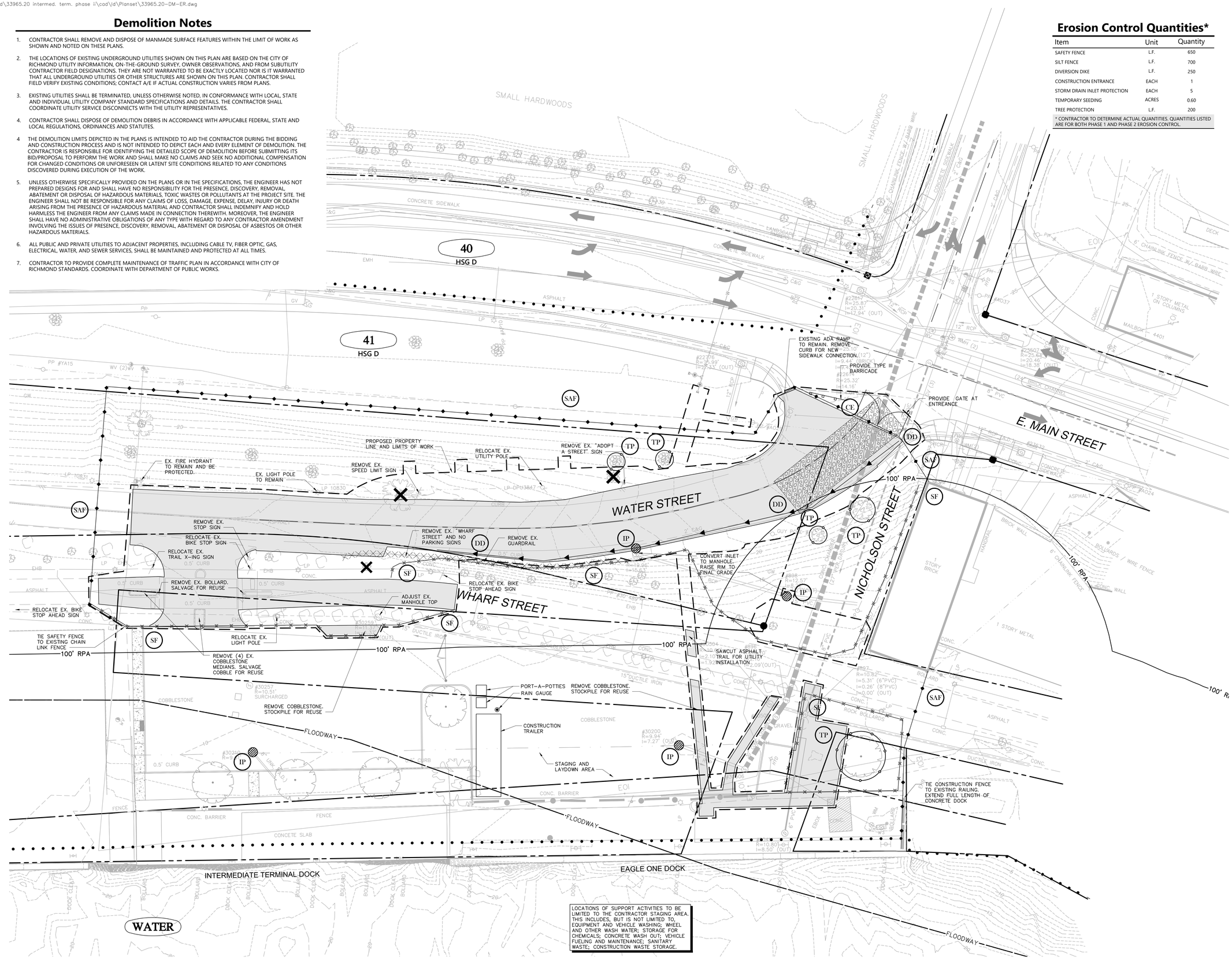

Erosion Control Quantities*

Item	Unit	Quantity
SAFETY FENCE	L.F.	650
SILT FENCE	L.F.	700
DIVERSION DIKE	L.F.	250
CONSTRUCTION ENTRANCE	EACH	1
STORM DRAIN INLET PROTECTION	EACH	5
TEMPORARY SEEDING	ACRES	0.60
TREE PROTECTION	L.F.	200

* CONTRACTOR TO DETERMINE ACTUAL QUANTITIES. QUANTITIES LISTED ARE FOR BOTH PHASE 1 AND PHASE 2 EROSION CONTROL.

vhb.com
115 South 15th Street
Suite 200
Richmond, VA 23219
804.343.7100

Demolition Legend

- DEMOLITION LIMITS. REMOVE AND DISPOSE OF EXISTING MANMADE SURFACE FEATURES, INCLUDING BUILDINGS, STRUCTURES, PAVEMENTS, SLABS, CURBING, WALLS, FENCES, UTILITY POLES, SIGNS, ETC, UNLESS OTHERWISE NOTED. REMOVE AND DISPOSE OF FOUNDATIONS AND UNSUITABLE MATERIAL PER DRAWINGS AND SPECIFICATIONS.
- TREE, UTILITY POLES, AND OTHER STRUCTURES TO BE REMOVED
- LIMITS OF WORK
- UTILITY TO BE REMOVED
- UTILITY TO BE ABANDONED IN PLACE ACCORDING TO CITY OF RICHMOND STANDARDS

Erosion Control Legend

- LIMITS OF WORK
- NATURAL DRAINAGE DIVIDE
- SAF — 3.01 - TEMPORARY CHAIN LINK SAFETY FENCE, MIN. 6' HEIGHT
- CE — 3.02 - CONSTRUCTION ENTRANCE
- SF — 3.05 - SILT FENCE
- DD — 3.09 - TEMPORARY DIVERSION DIKE
- IP — 3.07 - STORM DRAIN INLET PROTECTION
- TS — 3.31 - TEMPORARY SEEDING
- PS — 3.32 - PERMENANT SEEDING
- TP — 3.38 - TREE PROTECTION FENCING

Soils Legend

- SOIL DIVIDE
- XX / HSG X — SOIL UNIT TYPE, PER USDA NATURAL RESOURCES CONSERVATION SOIL MAP HYDROLOGIC SOIL GROUP

0 10 20 40 Feet

Intermediate Terminal Phase 2 - Public Access

3101 Wharf Street
Richmond, Virginia

No.	Revision	Date	Appvd.

Designed by | Checked by

Issued for: Permitting

Date: June 22, 2018

Drawing Title

Demolition and Erosion and Sediment Control Plan Phase 1

Drawing Number

C2.02

Sheet of

Project Number: 33965.20

COMMONWEALTH OF VIRGINIA
JOHN P. CARTY
Lic. No. 039452
6/22/18
PROFESSIONAL ENGINEER

\\vhb\proj\Richmond\33965.20 intermed. term. phase ii\cad\d\Planset\33965.20-LM-UT.dwg

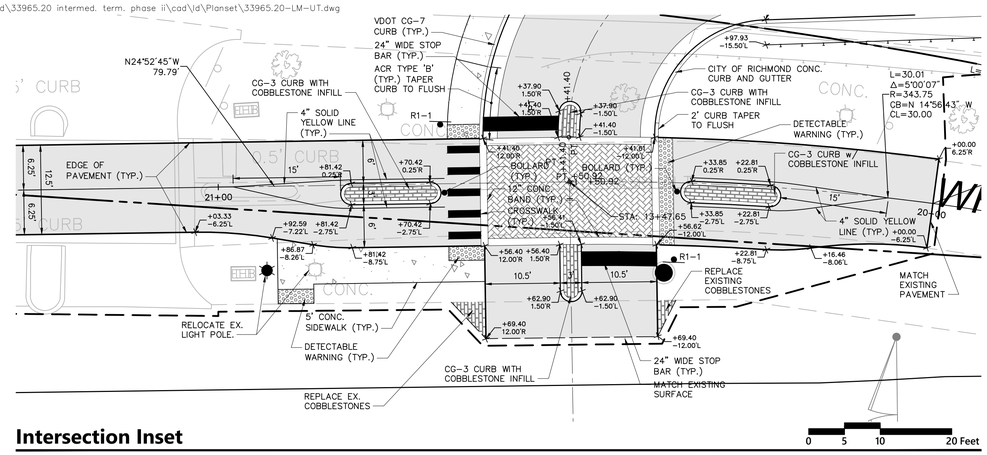

Intersection Inset

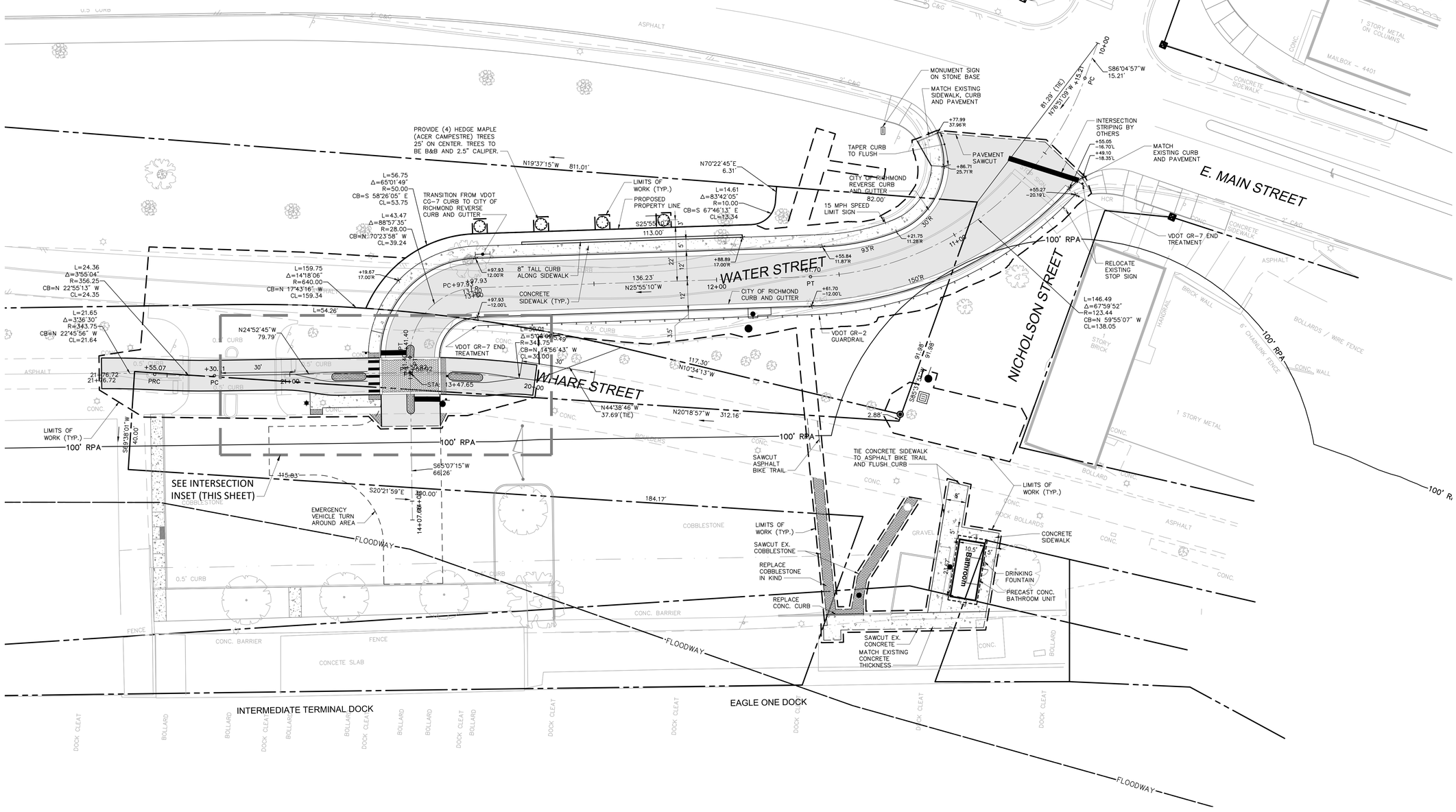

vhb.com

115 South 15th Street
Suite 200
Richmond, VA 23219
804.343.7100

Pavement Legend

- ASPHALT PAVEMENT
- CONCRETE SIDEWALK
- VEHICULAR RATED BRICK CROSSING
- COBBLESTONE

Sign Summary

MUTCD Number	Height	Width	Description
R1-1	30"	2'-6"	STOP
R2-1	30"	24"	SPEED LIMIT 15

Intermediate Terminal Phase 2 - Public Access

3101 Wharf Street
Richmond, Virginia

No.	Revision	Date	Appvd.

Designed by
Checked by
Issued for: Permitting
Date: June 22, 2018

Drawing Title: Layout and Materials Plan

Drawing Number: C3.01

Sheet of

Project Number: 33965.20

COMMONWEALTH OF VIRGINIA
JOHN P. CARTY
Lic. No. 039452
6/22/18
PROFESSIONAL ENGINEER

Saved Friday, June 22, 2018 4:28:47 PM CVAUGHAN Plotted Friday, June 22, 2018 4:51:04 PM Vaughan, Charlie

\\vhb\proj\Richmond\33965.20 intermed. term. phase ii\cad\d\Planset\33965.20-LM-UT.dwg

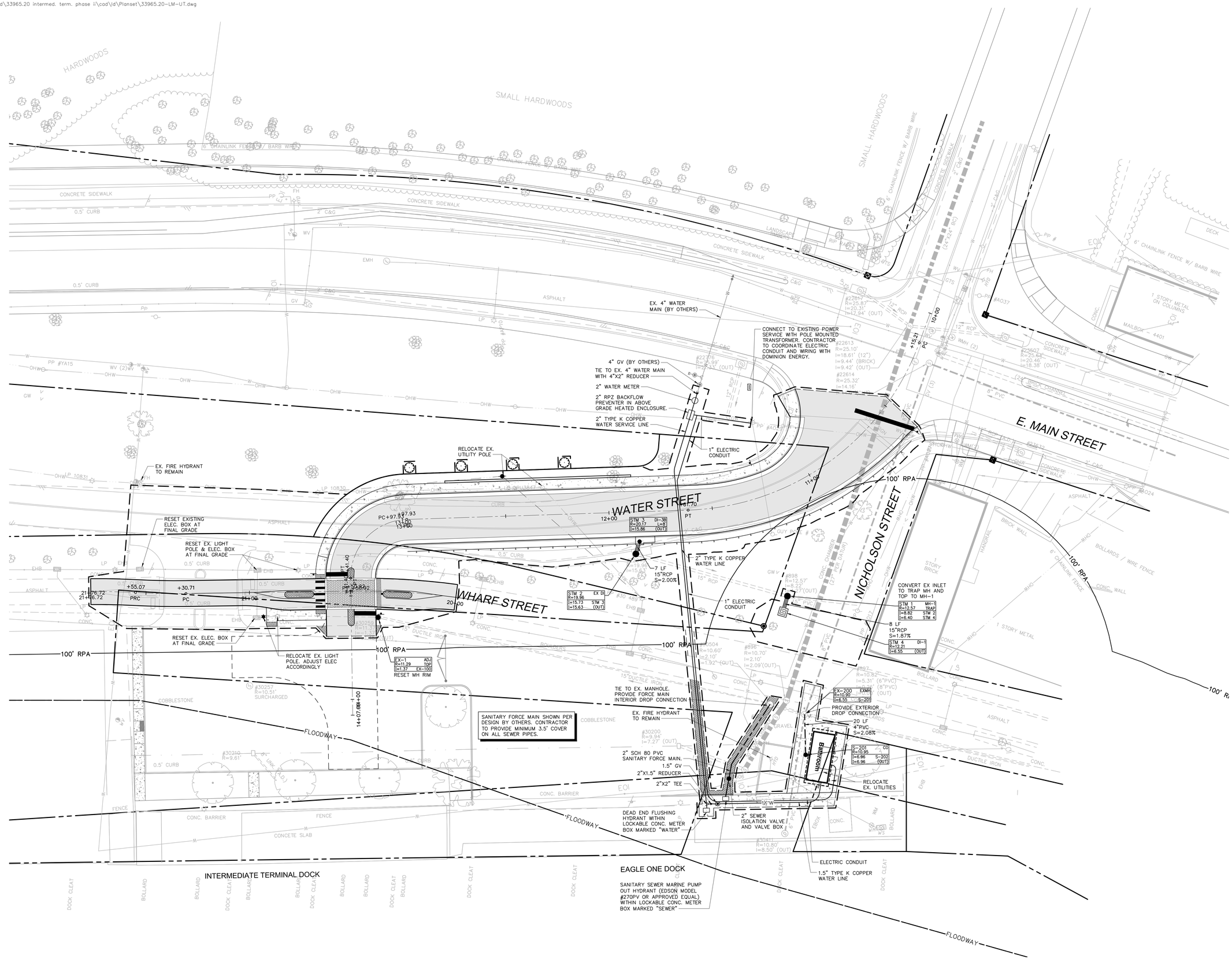

vhb.com

115 South 15th Street
Suite 200
Richmond, VA 23219
804.343.7100

0 10 20 40 Feet

Intermediate Terminal Phase 2 - Public Access

3101 Wharf Street
Richmond, Virginia

No.	Revision	Date	Appvd.

Designed by | Checked by

Issued for: Permitting

Date: June 22, 2018

Drawing Title: Utility Plan

Drawing Number: C3.02

Sheet of

Project Number: 33965.20

COMMONWEALTH OF VIRGINIA
JOHN P. CURTY
Lic. No. 039452
6/22/18
PROFESSIONAL ENGINEER

Saved Friday, June 22, 2018 4:28:47 PM CVAUGHAN Plotted Friday, June 22, 2018 4:51:14 PM Vaughan, Charlie

\\vhb\proj\Richmond\33965.20 intermed. term. phase ii\cad\d\Planset\33965.20-GD.dwg

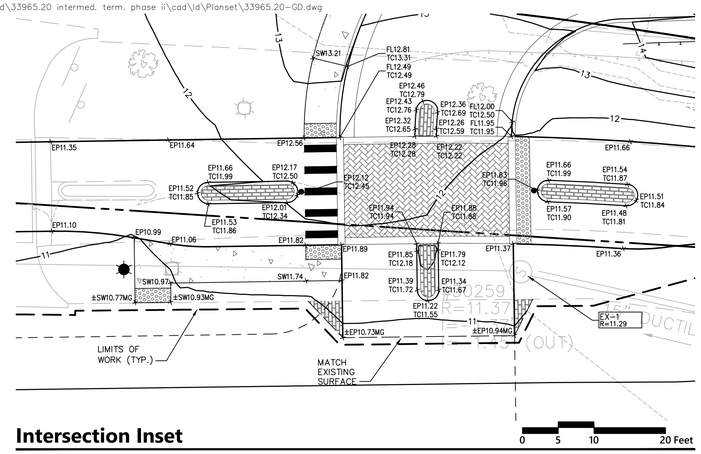

Intersection Inset

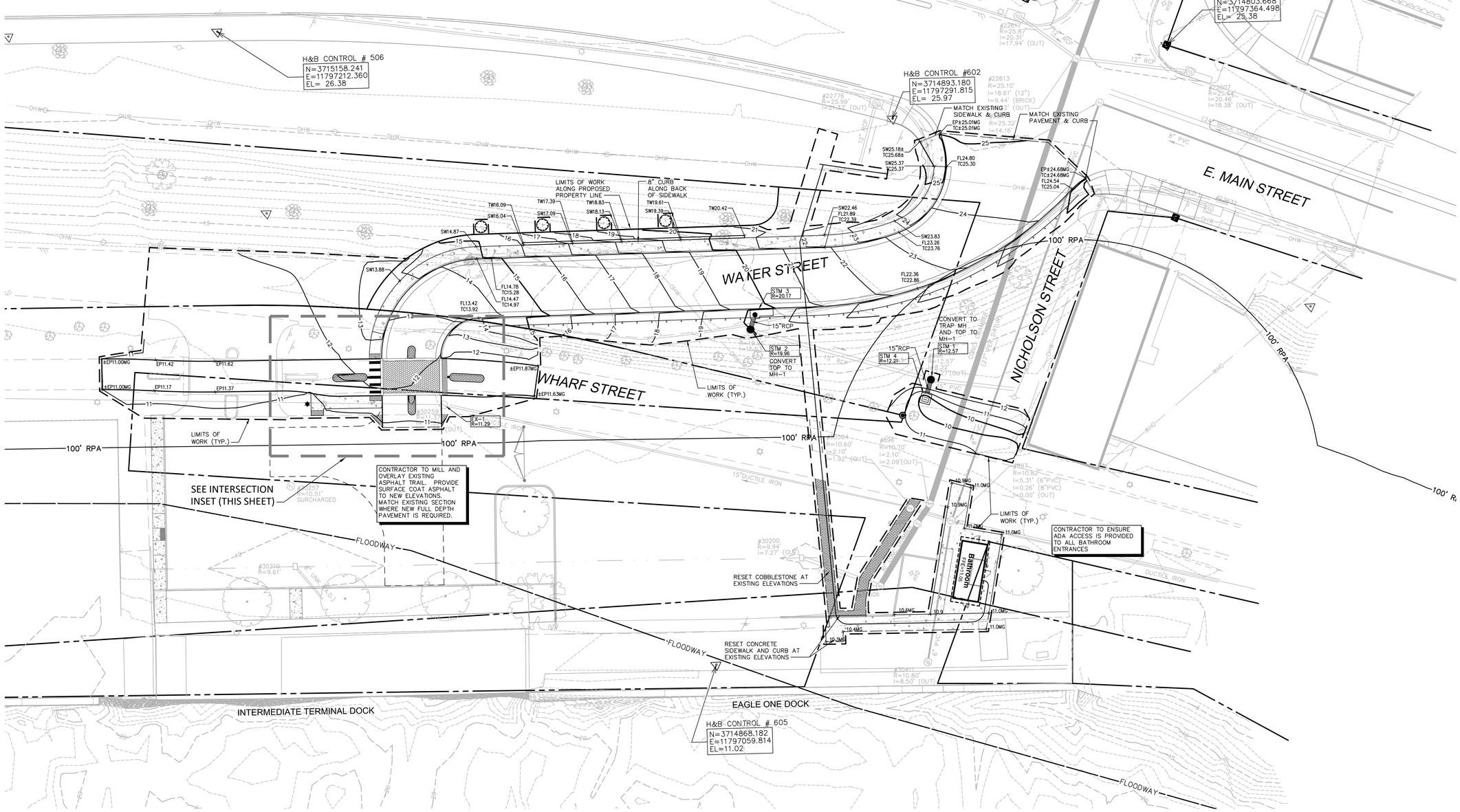

vhb.com
115 South 15th Street
Suite 200
Richmond, VA 23219
804.343.7100

Intermediate Terminal Phase 2 - Public Access

3101 Wharf Street
Richmond, Virginia

No.	Revision	Date	Appvd.

Designed by | Checked by

Issued for: Permitting

Date: June 22, 2018

Drawing Title: Grading and Drainage Plan

Drawing Number: C4.01

Sheet of

Project Number: 33965.20

COMMONWEALTH OF VIRGINIA
JOHN P. CARTY
Lic. No. 039452
6/22/18
PROFESSIONAL ENGINEER

Saved: Friday, June 22, 2018 4:47:54 PM CVAUGHAN Plotted: Friday, June 22, 2018 4:51:48 PM Vaughan, Charlie

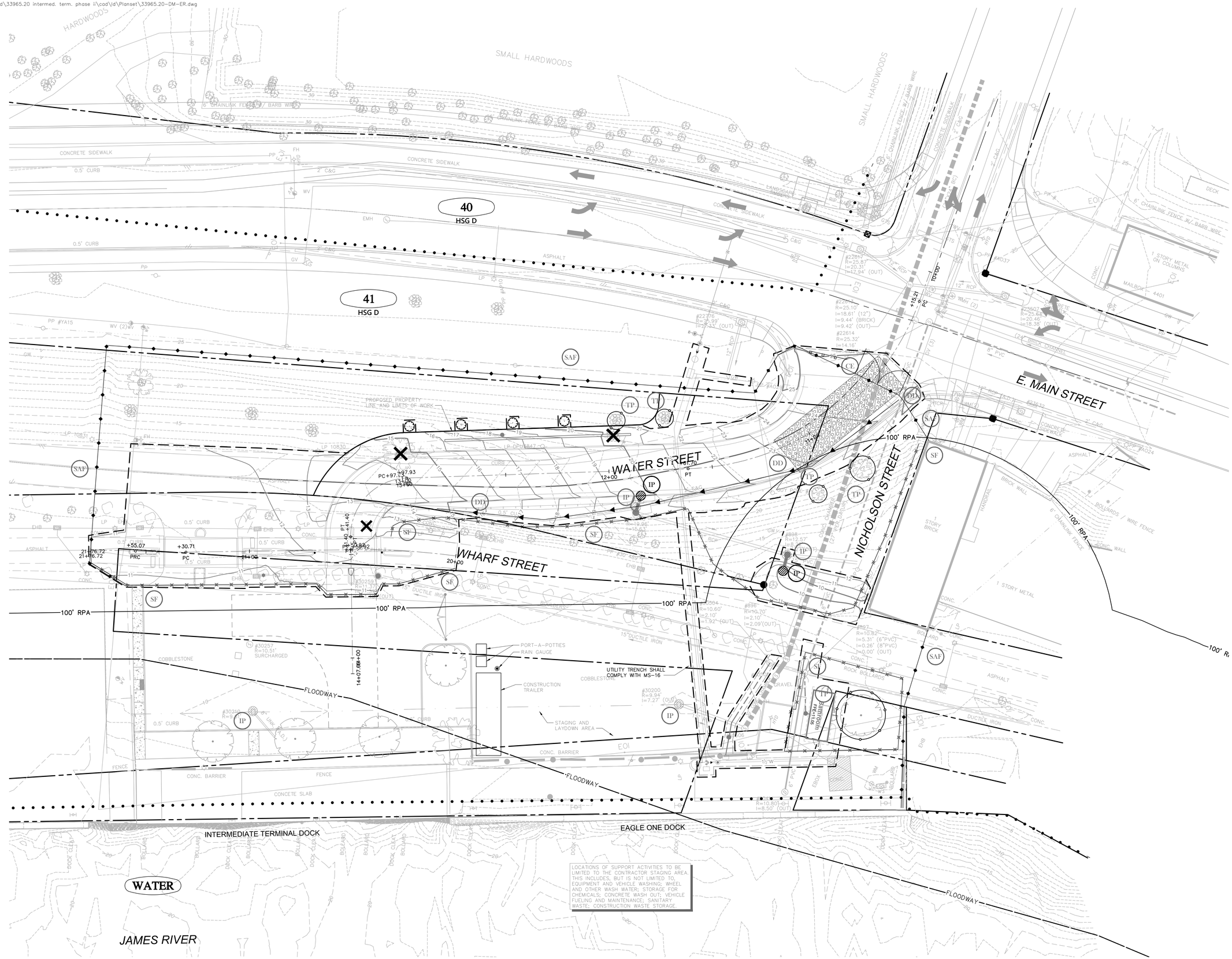

vhb.com

115 South 15th Street
Suite 200
Richmond, VA 23219
804.343.7100

Erosion Control Legend

		LIMITS OF WORK
		NATURAL DRAINAGE DIVIDE
	SAF	3.01 - TEMPORARY CHAIN LINK SAFETY FENCE, MIN. 6' HEIGHT
	CE	3.02 - CONSTRUCTION ENTRANCE
	SF	3.05 - SILT FENCE
	DD	3.09 - TEMPORARY DIVERSION DIKE
	IP	3.07 - STORM DRAIN INLET PROTECTION
TS	TS	3.31 - TEMPORARY SEEDING
PS	PS	3.32 - PERMENANT SEEDING
	TP	3.38 - TREE PROTECTION FENCING

Soils Legend

	SOIL DIVIDE
XX HSG X	SOIL UNIT TYPE, PER USDA NATURAL RESOURCES CONSERVATION SOIL MAP HYDROLOGIC SOIL GROUP

0 10 20 40 Feet

Intermediate Terminal Phase 2 - Public Access

3101 Wharf Street
Richmond, Virginia

No.	Revision	Date	Appvd.

Designed by | Checked by

Issued for: Permitting

Date: June 22, 2018

Drawing Title

Erosion and Sediment Control Plan Phase 2

Drawing Number

C5.01

Sheet of

COMMONWEALTH OF VIRGINIA
JOHN P. CARTY
Lic. No. 039452
6/22/18
PROFESSIONAL ENGINEER

Project Number
33965.20

Erosion Control Construction Narrative

Project Description and Schedule

THE PROJECT PROPOSES TO CONSTRUCT A VEHICULAR ACCESS DRIVEWAY TO THE IMPROVED INTERMEDIATE TERMINAL DOCK IN RICHMOND, VIRGINIA. THE DRIVEWAY WILL BEGIN AT THE INTERSECTION OF EAST MAIN STREET AND NICHOLSON STREET IN THE EAST END OF THE CITY. THE REST OF THE SITE DISTURBANCE WILL BE APPROXIMATELY BOUND BY EAST MAIN STREET, NICHOLSON STREET, THE JAMES RIVER, AND THE ABANDONED WHARF STREET TUNNEL BUILDING. PROPOSED IMPROVEMENTS INCLUDE A 24' DRIVEWAY, A CONCRETE SIDEWALK AND SHORT RETAINING WALL ALONG THE EAST SIDE OF THE ROAD, RELOCATION OF THE EXISTING VEHICULAR CROSSING OF THE VIRGINIA CAPITAL TRAIL, AND THE INSTALLATION OF A PREFABRICATED RESTROOM BUILDING AND ASSOCIATED UTILITY CONNECTIONS.

THE PROPOSED SITE DISTURBED AREA IS 0.60 ACRES.

CONSTRUCTION IS ANTICIPATED TO START IN AUGUST 2018, WITH SUBSTANTIAL COMPLETION OF ALL PROPOSED IMPROVEMENTS IN DECEMBER 2018, FOR A DURATION OF APPROXIMATELY 6 MONTHS.

Objective of the Erosion and Sediment Control Plan

AS REQUIRED BY VIRGINIA ADMINISTRATIVE CODE SECTION 9VAC25-840, THE OBJECTIVE OF THIS EROSION AND SEDIMENT CONTROL PLAN IS TO ESTABLISH SPECIFIC GUIDELINES FOR CONTROLLING SOIL EROSION AND SEDIMENTATION DURING AND AFTER THE CLEARING, GRUBBING, AND EARTHWORK ASSOCIATED WITH PREPARATION OF THE SITE FOR BUILDING CONSTRUCTION. MOREOVER, THIS PLAN SPECIFIES THE CONTROL MEASURES THAT WILL BE EMPLOYED TO PROVIDE A PRACTICAL AND WORKABLE MEANS OF MINIMIZING DETRIMENTAL IMPACTS TO SOILS AND WATER RESOURCES AS A RESULT OF THE CONSTRUCTION ACTIVITIES. ALL MEASURES ARE DESIGNED IN ACCORDANCE WITH THE VIRGINIA EROSION AND SEDIMENT CONTROL HANDBOOK, THIRD EDITION, 1992.

Existing Conditions / General Description

THE SITE ON WHICH THE PROPOSED DEVELOPMENT WILL OCCUR IS CLASSIFIED AS URBAN LAND AND HAS BEEN PREVIOUSLY DEVELOPED. THE MAJORITY OF THE SITE CONSISTS OF THE EXISTING WATER STREET ROAD BED, WHICH WILL BE REMOVED WITH THIS PROJECT, AND LAWN HILLSIDE ON EITHER SIDE OF THE ROAD.

THE SITE IS APPROXIMATELY 53% IMPERVIOUS, WITH ALL IMPERVIOUS AREA COMING FROM THE ASPHALT ROAD SECTION. THE REMAINDER OF THE SITE CONSISTS OF A NARROW LANDSCAPE BUFFER SURROUNDING THE SITE, WHICH IS PRIMARILY LAWN. THE ADJACENT INTERMEDIATE TERMINAL DOCK HAS BEEN RECENTLY IMPROVED TO ADD LANDSCAPED AREAS WITHIN THE COBBLESTONE DOCK.

TOPOGRAPHY OF THE EXISTING ROAD IS FAIRLY STEEP, WITH A SLOPE OF 6%. THE HIGH ELEVATION OF 25 FEET IS AT THE MAIN AND NICHOLSON STREETS INTERSECTION, WITH THE ROAD SLOPING DOWN TO AN ELEVATION OF 11 FEET AT THE DOCK. ALL DRAINAGE SHEET FLOWS TO ADJACENT STORM SEWER STRUCTURES IN THE ROAD AND DOCK. ALL DRAINAGE OUTFALLS TO THE CITY OF RICHMOND'S COMBINED SEWER OUTFALL.

Clearing and Grubbing

THIS SITE REQUIRES CLEARING AND GRUBBING, THE LIMITS OF WHICH ARE SHOWN ON THE EROSION CONTROL AND DEMOLITION PLANS. THIS LIMIT WAS ESTABLISHED OUTSIDE THE AREAS TO BE GRADED AND OUTSIDE OF ANY AREAS DESIGNATED AS TREE PROTECTION AREAS. ANY DEMOLISHED MATERIALS AND EXCAVATED SOIL WILL BE REMOVED FROM THE SITE AND DISPOSED OF LEGALLY AT A CERTIFIED LANDFILL OR RECYCLED. NO ON-SITE STOCKPILING IS ANTICIPATED AT THIS TIME.

Adjacent Site

THE SITE IS BOUND BY EAST MAIN STREET TO THE EAST, NICHOLSON STREET TO THE SOUTH, THE JAMES RIVER TO THE WEST, AND THE ABANDONED WHARF STREET TUNNEL BUILDING TO THE NORTH. THIS ABANDONED BUILDING IS PRIVATELY OWNED AND EXPECTED TO BE RENOVATED AND CONVERTED TO A RESTAURANT IN THE NEAR FUTURE.

THE EXISTING WATER STREET RIGHT OF WAY WILL BE REMOVED WITH THIS PROJECT.

Off-Site Areas

THERE WILL BE NO OFF-SITE LAND DISTURBANCE FOR THIS PROJECT. THE CONTRACTOR IS TO ENSURE ALL WASTE FROM THE PROJECT IS PROPERLY DISPOSED OF AT AN APPROVED SITE WHICH HAS ALL NECESSARY PERMITS.

Soils

THE US DEPARTMENT OF AGRICULTURE'S NATURAL RESOURCES CONSERVATION SERVICE SOILS MAP SHOWS THE SITE'S SOIL TYPE TO BE 100% URBAN LAND (UNIT 41), WHICH IS HYDROLOGIC SOIL GROUP TYPE "D".

Critical Areas

PORTIONS OF THE SITE ARE LOCATED WITHIN THE CHESAPEAKE BAY RESOURCE PROTECTION AREA (RPA), AND THE ENTIRE SITE IS LOCATED WITHIN THE RESOURCE MANAGEMENT AREA (RMA). THESE AREAS WILL BE PROTECTED WITH EROSION CONTROL MEASURES AS SHOWN ON THE PLANS. THE CONTRACTOR SHALL REGULARLY INSPECT THESE AREAS TO PROTECT THE NATURAL RESOURCES.

STEEP SLOPES EXIST ON SITE AND WILL BE DISTURBED WITH THE IMPROVEMENTS. CONTRACTOR SHALL PROTECT THESE AREAS FROM EROSION. PROVIDE SEEDING AND STABILIZE AS QUICKLY AS POSSIBLE.

ACCORDING TO THE U.S. FEDERAL EMERGENCY MANAGEMENT (FEMA) FLOOD INSURANCE RATE MAP FOR THE CITY OF RICHMOND, VIRGINIA, COMMUNITY PANEL 510129-0043-E, THE JAMES RIVER FLOODWAY IS ALONG THE WESTERN EDGE OF THE SITE. NO IMPROVEMENTS ARE PROPOSED WITHIN THE FLOODWAY. THE ENTIRE SITE IS ALSO SHOWN LOCATED WITHIN ZONE AE, WHICH IS SUBJECT TO FLOODING BY THE 1% ANNUAL CHANCE FLOOD (100-YEAR FLOOD), WITH A BASE FLOOD ELEVATION OF APPROXIMATELY 33 FEET.

THERE ARE NO WETLANDS LOCATED WITHIN THE LIMITS OF THIS SITE.

Permanent Stabilization

ALL NON-IMPERVIOUS AREAS REMAINING SHALL BE PERMANENTLY SEEDED PER VESCH STANDARDS AND SPECIFICATIONS OR THE LANDSCAPE PLAN SPECIFICATION.

Erosion and Sediment Control Measures

ALL EROSION AND SEDIMENT CONTROL MEASURES SHALL BE INSTALLED IN ACCORDANCE WITH THE VIRGINIA EROSION AND SEDIMENT CONTROL HANDBOOK (VESCH), THIRD EDITION, 1992.

CONSTRUCTION ENTRANCE - STANDARD 3.02
POINTS OF VEHICULAR INGRESS AND EGRESS SHALL HAVE A STABILIZED STONE PAD WITH A FILTER FABRIC UNDERLINER TO REDUCE THE AMOUNT OF MUD TRANSPORTED ONTO PAVED PUBLIC ROADS BY MOTOR VEHICLES OR RUNOFF FROM THE CONSTRUCTION SITE.

SILT FENCE - STANDARD 3.05
SILT FENCE IS INSTALLED TO INTERCEPT AND DETAIN SMALL AMOUNTS OF SEDIMENT FROM DISTURBED AREAS DURING CONSTRUCTION OPERATIONS IN ORDER TO PREVENT SEDIMENT FROM LEAVING THE SITE. SILT FENCES SHALL BE INSPECTED IMMEDIATELY AFTER EACH RAINFALL AND AT LEAST DAILY DURING PROLONGED RAINFALL. ANY REQUIRED REPAIRS SHALL BE MADE IMMEDIATELY. CLOSE ATTENTION SHOULD BE PAID TO THE REPAIR OF DAMAGED SILT FENCE RESULTING FROM END RUNS AND UNDERCUTTING. SHOULD THE FABRIC ON A SILT FENCE DECOMPOSE OR BECOME INEFFECTIVE PRIOR TO THE END OF THE EXPECTED USABLE LIBE AND THE BARRIER STILL BE NECESSARY, THE FABRIC SHALL BE REPLACED PROMPTLY. SEDIMENT DEPOSITS SHOULD BE REMOVED AFTER EACH STORM EVENT. THEY MUST BE REMOVED WHEN DEPOSITS REACH APPROXIMATELY ONE-HALF THE HEIGHT OF THE BARRIER. ANY SEDIMENT DEPOSITS REMAINING IN PLACE AFTER THE SILT FENCE IS NO LONGER REQUIRED SHALL BE DRESSED TO CONFORM WITH THE EXISTING GRADE, PREPARED, AND SEEDED. ALL SILT FENCE SHALL BE INSTALLED IN ACCORDANCE WITH VESCH STANDARDS AND SPECIFICATION 3.05.

INLET PROTECTION - 3.07
INLET PROTECTION IS INSTALLED AT STORM SEWER INLETS PRIOR TO CLEARING OF THE UPSTREAM AREAS TO PREVENT SEDIMENT FROM ENTERING THE SEWER SYSTEM AND LEAVING THE SITE. INLET PROTECTION SHALL REMAIN IN PLACE UNTIL THE PROJECT SITE IS FULLY STABILIZED. ALL INLET PROTECTION SHALL BE INSTALLED IN ACCORDANCE WITH VESCH STANDARD AND SPECIFICATION 3.07.

VEGETATIVE PRACTICES
ALL DISTURBED AREAS SHALL BE SODDED OR SEEDED WITH FAST-GERMINATING, TEMPORARY VEGETATION IMMEDIATELY FOLLOWING GRADING OR WHERE EXPOSED SOIL SURFACES WILL NOT BE BROUGHT TO FINAL GRADE FOR A PERIOD OF TIME EXCEEDING 14 DAYS. REFER TO THE VESCH FOR APPROPRIATE SEED MIXTURE DEPENDENT ON LOCATION AND TIME OF YEAR.

Maintenance of Erosion and Sediment Control Facilities

ALL MAINTENANCE OF TEMPORARY AND PERMANENT EROSION AND SEDIMENT CONTROL FACILITIES SHALL BE CARRIED OUT IN ACCORDANCE WITH THE VIRGINIA EROSION AND SEDIMENT CONTROL REGULATIONS (9VAC25-840-40). DURING THE PERIOD THAT THE PROJECT SITE IS UNDER CONSTRUCTION, THE CONTRACTOR WILL BE RESPONSIBLE FOR MAINTENANCE OF THE EROSION AND SEDIMENT CONTROL FACILITIES. THE CONTRACTOR WILL INSPECT EROSION AND SEDIMENT CONTROL FACILITIES ON A REGULAR BASIS, ESPECIALLY AFTER PERIODS OF HEAVY RAINFALL. ANY DAMAGE DISCOVERED WILL BE REPAIRED PROMPTLY BY THE CONTRACTOR. FURTHERMORE, A READILY AVAILABLE SUPPLY OF EROSION AND SEDIMENT CONTROL MATERIALS WILL BE MAINTAINED BY THE CONTRACTOR AT ALL TIMES.

- CONSTRUCTION ENTRANCE
  THE ENTRANCE SHALL BE MAINTAINED IN A CONDITION WHICH WILL PREVENT TRACKING OR FLOW OF MUD ONTO PUBLIC RIGHTS OF WAY. THIS MAY REQUIRE PERIODIC TOP DRESSING WITH ADDITIONAL STONE OR THE WASHING AND REWORKING OF EXISTING STONE AS CONDITIONS DEMAND AND REPAIR AND/OR CLEANOUT OF ANY STRUCTURES USED TO TRAP SEDIMENT.
- SILT FENCE
  SILT FENCES SHALL BE INSPECTED IMMEDIATELY AFTER EACH RAINFALL AND AT LEAST DAILY DURING PROLONGED RAINFALL. ANY REQUIRED REPAIRS SHALL BE MADE IMMEDIATELY. SEDIMENT DEPOSITS SHOULD BE REMOVED AFTER EACH STORM EVENT. THEY MUST BE REMOVED WHEN DEPOSITS REACH APPROXIMATELY ONE-HALF THE HEIGHT OF THE BARRIER. CLOSE ATTENTION SHALL BE PAID TO THE REPAIR OF DAMAGED SILT FENCE RESULTING FROM END RUNS AND UNDERCUTTING.
- INLET PROTECTION
  THE STRUCTURE SHALL BE INSPECTED AFTER EACH RAIN AND REPAIRS MADE AS NECESSARY. SEDIMENT SHALL BE REMOVED AND THE TRAP RESTORED TO ITS ORIGINAL DIMENSIONS WHEN THE SEDIMENT HAS ACCUMULATED TO ONE HALF THE DESIGN DEPTH OF THE TRAP. REMOVED SEDIMENT SHALL BE DEPOSITED IN A SUITABLE AREA AND IN SUCH A MANNER THAT IT WILL NOT ERODE.

Pumping of Stormwater

SHOULD IT BE NECESSARY TO PUMP STORMWATER DURING CONSTRUCTION BECAUSE THE GRADING WILL NOT ALLOW FOR GRAVITY FLOW, THEN THE PUMPED STORMWATER MUST BE FILTERED THROUGH A SILT SACK, OR SIMILAR SEDIMENT TRAPPING DEVICE, BEFORE OUTLETING INTO THE STORM SEWER SYSTEM.

Stormwater Management Runoff

DURING CLEARING, GRUBBING, AND THROUGHOUT CONSTRUCTION, STORMWATER RUNOFF WILL SHEET FLOW TO EXISTING OR PROPOSED STORMWATER INLETS, WITH INLET PROTECTION, AND OTHER PERIMETER CONTROLS SUCH AS SILT FENCE. THROUGH THESE MEASURES, THE RUNOFF WILL BE FILTERED PRIOR TO RELASE INTO THE EXISTING COMBINED SEWER SYSTEM.

Tree Protection

TREE PROTECTION IS USED TO PROTECT DESIRABLE TREES FROM MECHANICAL AND OTHER INJURY DURING LAND DISTURBING AND CONSTRUCTION ACTIVITY. IN SPITE OF PRECAUTIONS, SOME DAMAGE TO PROTECTED TREES MAY OCCUR. IN SUCH CASES, THE FOLLOWING MAINTENANCE GUIDELINES SHOULD BE FOLLOWED:

1. SOIL AERATION - THE GROUND SHALL BE AERATED IF THE SOIL BECOMES COMPACTED OVER THE ROOT ZONE.
2. REPAIR OF DAMAGE.
3. FERTILIZATION - BROADLEAF TREES THAT HAVE BEEN STRESSED OR DAMAGED SHALL RECEIVE A HEAVY APPLICATION OF FERTILIZER TO AID THEIR RECOVERY.

ALL TREE PROTECTION SHALL BE INSTALLED IN ACCORDANCE WITH VESCH STANDARD AND SPECIFICATION 3.38. IF THE SOIL BECOMES COMPACTED OVER THE ROOT ZONE OF ANY TREE, THE GROUND SHALL BE AERATED BY PUNCHING HOLES WITH AN IRON BAR. BROADLEAF TREES THAT HAVE BEEN STRESSED OR DAMAGED SHALL RECEIVE A HEAVY APPLICATION OF FERTILIZER TO AID THEIR RECOVERY.

ALL TREE PROTECTION AREAS SHALL HAVE 4 FOOT HIGH FENCING WITH MINUMUM 4 INCH SIGNAGE, IN ENGLISH AND SPANISH, RESTRICTING ACCESS TO FENCED AREAS. CONTRACTOR IS RESPONSIBLE FOR RESTRICTING ACCESS TO FENCED AREAS.

Final Site Cleanup

NO EROSION AND SEDIMENT CONTROL MEASURES CAN BE REMOVED WITHOUT APPROVAL OF THE ENVIRONMENTAL INSPECTOR FOR THE PROJECT. ALL TEMPORARY EROSION AND SEDIMENT CONTROL MEASURES WILL BE REMOVED ONLY WHEN ALL PREVIOUSLY DENUDED AREAS PROTECTED BY DEVICES HAVE BECOME STABILIZED. THE STONE AND/OR ROCK USED AT CONSTRUCTION ENTRANCES AND ANY OTHER LOCATION ON THE SITE WILL BE REMOVED AND DISPOSED OF IN THE APPROPRIATE MANNER. THE SILT FENCES USED ALONG THE LIMITS OF WORK WILL BE REMOVED IF VEGETATIVE COVER AND SLOPE STABILITY HAVE BEEN ATTAINED.

Chesapeake Bay Narrative

Existing Conditions and Vegetation

THE PROPOSED SITE HAS BEEN PREVIOUSLY DEVELOPED AND IS 53% IMPERVIOUS. THE SITE CONSISTS OF THE EXISTING WATER STREET; A PORTION OF THE VIRGINIA CAPITAL TRAIL, AN ASPHALT BIKE AND PEDESTRIAN PATH; THE COBBLESTONE PAVED INTERMEDIATE TERMINAL DOCK WITH LANDSCAPED ISLANDS; AND A TURF HILLSIDE, OF APPROXIMATELY 3:1 SLOPES, ON EITHER SIDE OF THE ROAD.

VEGETATION ON SITE IS LIMITED TO THE TURF HILLSIDE, ARE A FEW TREES ALONG WATER STREET, MINIMAL SHRUB PLANTINGS ALONG THE BIKE TRAIL, AND TREES WITHIN THE LANDSCAPED ISLANDS OF THE INTERMEDIATE TERMINAL DOCK.

THREE EXISTING TREES WILL NEED TO BE REMOVED WITH THIS PROJECT, AS SHOWN ON THE DEMOLITION PLAN. HOWEVER, EXISTING ASPHALT WITHIN WATER STREET IS ALSO BEING REMOVED AND REPLACED WITH LAWN, FOR AN OVERALL INCREASE IN PERVIOUS AREA.

Chesapeake Bay Measures

SINCE THIS SITE FALLS WITHIN THE 500' RESOURCE MANAGEMENT AREA (RMA) BUFFER FOR THE JAMES RIVER, WATER QUALITY AND STORMWATER MANAGEMENT MUST BE ADDRESSED. THIS DEVELOPMENT WILL MEET THE REQUIREMENTS OF DEVELOPING WITHIN A CHESAPEAKE BAY PRESERVATION AREA (CBPA) THROUGH THE OVERALL REDUCTION IN IMPERVIOUS AREA AND PURCHASE OF OFFSITE NUTRIENT CREDITS.

PER THE VIRGINIA RUNOFF REDUCTION METHOD, TREATMENT MUST BE PROVIDED FOR BOTH EXISTING AND PROPOSED IMPERVIOUS AREAS ON SITE. WHILE IMPERVIOUS AREAS ARE BEING REDUCED, AN ADDITIONAL CREDIT MUST BE PROVIDED FOR THE SIGNIFICANT AMOUNT OF EXISTING IMPERVIOUS AREA. DUE TO SITE CONSTRAINTS THAT ELIMINATE THE USE OF A BEST MANAGEMENT PRACTICE ON SITE, OFFSITE NUTRIENT CREDITS WILL BE PURCHASED TO MEET THE WATER QUALITY TREATMENT REQUIREMENT. THESE CREDITS WILL BE LOCATED WITHIN THE SAME OVERALL WATERSHED TO THE CHESAPEAKE BAY. REFER TO CREDIT AVAILABILITY LETTER PROVIDED ON THE CALCULATIONS PAGE OF THESE PLANS FOR MORE INFORMATION.

City of Richmond Erosion and Sediment Control Notes

1. PERMANENT OR TEMPORARY SOIL STABILIZATION SHALL BE APPLIED TO DENUDED AREAS WITHIN SEVEN DAYS AFTER FINAL GRADE IS REACHED ON ANY PORTION OF THE SITE. TEMPORARY SOIL STABILIZATION SHALL BE APPLIED WITHIN SEVEN DAYS TO DENUDED AREAS THAT MAY NOT BE AT FINAL GRADE BUT WILL REMAIN, DORMANT (UNDISTURBED) FOR LONGER THAN 14 DAYS. PERMANENT STABILIZATION SHALL BE APPLIED TO AREAS THAT ARE TO BE LEFT DORMANT FOR MORE THAN ONE YEAR.
2. EXCESS EXCAVATION DISPOSED OF OFF THE SITE SHALL BE DISPOSED OF IN ACCORDANCE WITH THE VIRGINIA EROSION AND SEDIMENT CONTROL HANDBOOK.
3. EROSION AND SEDIMENT CONTROLS SHALL BE INSTALLED IN ACCORDANCE WITH VIRGINIA EROSION AND SEDIMENT CONTROL HANDBOOK AND SHALL BE PLACED PRIOR TO OR AS THE FIRST STEP OF THE LAND DISTURBING ACTIVITY.
4. EROSION AND SEDIMENT CONTROLS SHALL BE MAINTAINED SO THAT THE SEDIMENT CARRYING RUNOFF FROM THE SITE WILL NOT ENTER STORM DRAINAGE FACILITIES.
5. EROSION AND SEDIMENT CONTROLS SHALL BE MAINTAINED UNTIL THE DISTURBED AREA IS STABILIZED.
6. PROPERTIES ADJOINING THE SITE SHALL BE KEPT CLEAN OF MUD OR SILT CARRIED FROM THE SITE BY VEHICULAR TRAFFIC OR RUNOFF.
7. THE DISPOSAL OF WASTE MATERIALS REMOVED FROM EROSION AND SEDIMENT CONTROL FACILITIES AND THE DISPOSAL OF THESE FACILITIES SHALL BE IN ACCORDANCE WITH THE VIRGINIA EROSION AND SEDIMENT CONTROL HANDBOOK.
8. STABILIZATION MEASURES SHALL BE APPLIED TO EARTHEN STRUCTURES SUCH AS DAMS, DIKES AND DIVERSIONS IMMEDIATELY AFTER INSTALLATION.
9. DURING CONSTRUCTION OF THE PROJECT, SOIL STOCKPILES SHALL BE STABILIZED OR PROTECTED WITH SEDIMENT TRAPPING MEASURES. THE APPLICANT IS RESPONSIBLE FOR THE TEMPORARY PROTECTION AND PERMANENT STABILIZATION OF ALL SOIL STOCKPILES ON SITE AS WELL AS SOIL INTENTIONALLY TRANSPORTED FROM THE PROJECT SITE.

General Erosion and Sediment Control Notes

PER VIRGINIA EROSION AND SEDIMENT CONTROL HANDBOOK, THIRD EDITION:

ES-1: UNLESS OTHERWISE INDICATED, ALL VEGETATIVE AND STRUCTURAL EROSION AND SEDIMENT CONTROL PRACTICES WILL BE CONSTRUCTED AND MAINTAINED ACCORDING TO MINIMUM STANDARDS AND SPECIFICATIONS OF THE VIRGINIA EROSION AND SEDIMENT CONTROL HANDBOOK AND VIRGINIA REGULATIONS 9VAC25-840 EROSION AND SEDIMENT CONTROL REGULATIONS.

ES-2: THE PLAN APPROVING AUTHORITY MUST BE NOTIFIED ONE WEEK PRIOR TO THE PRE-CONSTRUCTION CONFERENCE, ONE WEEK PRIOR TO THE COMMENCEMENT OF LAND DISTURBING ACTIVITY, AND ONE WEEK PRIOR TO THE FINAL INSPECTION.

ES-3: ALL EROSION AND SEDIMENT CONTROL MEASURES ARE TO BE PLACED PRIOR TO OR AS THE FIRST STEP IN CLEARING.

ES-4: A COPY OF THE APPROVED EROSION AND SEDIMENT CONTROL PLAN SHALL BE MAINTAINED ON THE SITE AT ALL TIMES.

ES-5: PRIOR TO COMMENCING LAND DISTURBING ACTIVITIES IN AREAS OTHER THAN INDICATED ON THESE PLANS (INLCUDING, BUT NOT LIMITED TO, OFF-SITE BORROW OR WASTE AREAS), THE CONTRACTOR SHALL SUBMIT A SUPPLEMENTARY EROSION CONTROL PLAN TO THE OWNER FOR REVIEW AND APPROVAL BY THE PLAN APPROVING AUTHORITY.

ES-6: THE CONTRACTOR IS RESPONSIBLE FOR INSTALLATION OF ANY ADDITIONAL EROSION CONTROL MEASURES NECESSARY TO PREVENT EROSION AND SEDIMENTATION AS DETERMINED BY THE PLAN APPROVING AUTHORITY.

ES-7: ALL DISTURBED AREAS ARE TO DRAIN TO APPROVED SEDIMENT CONTROL MEASURES AT ALL TIMES DURING LAND DISTURBING ACTIVITIES AND DURING SITE DEVELOPMENT UNTIL FINAL STABILIZATION IS ACHIEVED.

ES-8: DURING DEWATERING OPERATIONS, WATER WILL BE PUMPED INTO AN APPROVED FILTERING DEVICE.

ES-9: THE CONTRACTOR SHALL INSPECT ALL EROSION CONTROL MEASURES PERIODICALLY AND AFTER EACH RUNOFF-PRODUCING RAINFALL EVENT. ANY NECESSARY REPAIRS OR CLEANUP TO MAINTAIN THE EFFECTIVENESS OF THE EROSION CONTROL DEVICES SHALL BE MADE IMMEDIATELY.

Minimum Standards

AS REQUIRED BY VIRGINIA ADMINISTRATIVE CODE, SECTION 9VAC25-840-40:

AN EROSION AND SEDIMENT CONTROL PROGRAM ADOPTED BY A DISTRICT OR LOCALITY MUST BE CONSISTENT WITH THE FOLLOWING CRITERIA, TECHNIQUES AND METHODS:

1. PERMANENT OR TEMPORARY SOIL STABILIZATION SHALL BE APPLIED TO DENUDED AREAS WITHIN SEVEN DAYS AFTER FINAL GRADE IS REACHED ON ANY PORTION OF THE SITE. TEMPORARY SOIL STABILIZATION SHALL BE APPLIED WITHIN SEVEN DAYS TO DENUDED AREAS THAT MAY NOT BE AT FINAL GRADE BUT WILL REMAIN DORMANT FOR LONGER THAN 14 DAYS. PERMANENT STABILIZATION SHALL BE APPLIED TO AREAS THAT ARE TO BE LEFT DORMANT FOR MORE THAN ONE YEAR.

1\. DURING CONSTRUCTION OF THE PROJECT, SOIL STOCKPILES AND BORROW AREAS SHALL BE STABILIZED OR PROTECTED WITH SEDIMENT TRAPPING MEASURES. THE APPLICANT IS RESPONSIBLE FOR THE TEMPORARY PROTECTION AND PERMANENT STABILIZATION OF ALL SOIL STOCKPILES ON SITE AS WELL AS BORROW AREAS AND SOIL INTENTIONALLY TRANSPORTED FROM THE PROJECT SITE.

2\. A PERMANENT VEGETATIVE COVER SHALL BE ESTABLISHED ON DENUDED AREAS NOT OTHERWISE PERMANENTLY STABILIZED. PERMANENT VEGETATION SHALL NOT BE CONSIDERED ESTABLISHED UNTIL A GROUND COVER IS ACHIEVED THAT, IS UNIFORM, MATURE ENOUGH TO SURVIVE AND WILL INHIBIT EROSION.

3\. SEDIMENT BASINS AND TRAPS, PERIMETER DIKES, SEDIMENT BARRIERS AND OTHER MEASURES INTENDED TO TRAP SEDIMENT SHALL BE CONSTRUCTED AS A FIRST STEP IN ANY LAND DISTURBING ACTIVITY AND SHALL BE MADE FUNCTIONAL BEFORE UPSLOPE LAND DISTURBANCE TAKES PLACE.

4\. STABILIZATION MEASURES SHALL BE APPLIED TO EARTHEN STRUCTURES SUCH AS DAMS, DIKES AND DIVERSIONS IMMEDIATELY AFTER INSTALLATION.

5\. SEDIMENT TRAPS AND SEDIMENT BASINS SHALL BE DESIGNED AND CONSTRUCTED BASED UPON THE TOTAL DRAINAGE AREA TO BE SERVED BY THE TRAP OR BASIN.
   a. THE MINIMUM STORAGE CAPACITY OF A SEDIMENT TRAP SHALL BE 134 CUBIC YARDS PER ACRE OF DRAINAGE AREA AND THE TRAP SHALL ONLY CONTROL DRAINAGE AREAS LESS THAN THREE ACRES.
   b. SURFACE RUNOFF FROM DISTURBED AREAS THAT IS COMPRISED OF FLOW FROM DRAINAGE AREAS GREATER THAN OR EQUAL TO THREE ACRES SHALL BE CONTROLLED BY A SEDIMENT BASIN. THE MINIMUM STORAGE CAPACITY OF A SEDIMENT BASIN SHALL BE 134 CUBIC YARDS PER ACRE OF DRAINAGE AREA. THE OUTFALL SYSTEM SHALL, AT A MINIMUM, MAINTAIN THE STRUCTURAL INTEGRITY OF THE BASIN DURING A TWENTY-FIVE YEAR STORM OF 24-HOUR DURATION. RUNOFF COEFFICIENTS USED IN RUNOFF CALCULATIONS SHALL CORRESPOND TO A BARE EARTH CONDITION OR THOSE CONDITIONS EXPECTED TO EXIST WHILE THE SEDIMENT BASIN IS UTILIZED.

7\. CUT AND FILL SLOPES SHALL BE DESIGNED AND CONSTRUCTED IN A MANNER THAT WILL MINIMIZE EROSION. SLOPES THAT ARE FOUND TO BE ERODING EXCESSIVELY WITHIN ONE YEAR OF PERMANENT STABILIZATION SHALL BE PROVIDED WITH ADDITIONAL SLOPE STABILIZING MEASURES UNTIL THE PROBLEM IS CORRECTED.

8\. CONCENTRATED RUNOFF SHALL NOT FLOW DOWN CUT OR FILL SLOPES UNLESS CONTAINED WITHIN AN ADEQUATE TEMPORARY OR PERMANENT CHANNEL, FLUME OR SLOPE DRAIN STRUCTURE.

9\. WHENEVER WATER SEEPS FROM A SLOPE FACE, ADEQUATE DRAINAGE OR OTHER PROTECTION SHALL BE PROVIDED.

10\. ALL STORM SEWER INLETS THAT ARE MADE OPERABLE DURING CONSTRUCTION SHALL BE PROTECTED SO THAT SEDIMENT-LADEN WATER CANNOT ENTER THE CONVEYANCE SYSTEM WITHOUT FIRST BEING FILTERED OR OTHERWISE TREATED TO REMOVE SEDIMENT.

11\. BEFORE NEWLY CONSTRUCTED STORMWATER CONVEYANCE CHANNELS OR PIPES ARE MADE OPERATIONAL, ADEQUATE OUTLET PROTECTION AND ANY REQUIRED TEMPORARY OR PERMANENT CHANNEL LINING SHALL BE INSTALLED IN BOTH THE CONVEYANCE CHANNEL AND RECEIVING CHANNEL.

12\. WHEN WORK IN A LIVE WATERCOURSE IS PERFORMED, PRECAUTIONS SHALL BE TAKEN TO MINIMIZE ENCROACHMENT, CONTROL SEDIMENT TRANSPORT AND STABILIZE THE WORK AREA TO THE GREATEST EXTENT POSSIBLE DURING CONSTRUCTION. NONERODIBLE MATERIAL SHALL BE USED FOR THE CONSTRUCTION OF CAUSEWAYS AND COFFERDAMS. EARTHEN FILL MAY BE USED FOR THESE STRUCTURES IF ARMORED BY NONERODIBLE COVER MATERIALS.

13\. WHEN A LIVE WATERCOURSE MUST BE CROSSED BY CONSTRUCTION VEHICLES MORE THAN TWICE IN ANY SIX-MONTH PERIOD, A TEMPORARY VEHICULAR STREAM CROSSING CONSTRUCTED OF NONERODIBLE MATERIAL SHALL BE PROVIDED.

14\. ALL APPLICABLE FEDERAL, STATE AND LOCAL REQUIREMENTS PERTAINING TO WORKING IN OR CROSSING LIVE WATERCOURSES SHALL BE MET.

15\. THE BED AND BANKS OF A WATERCOURSE SHALL BE STABILIZED IMMEDIATELY AFTER WORK IN THE WATERCOURSE IS COMPLETED.

16\. UNDERGROUND UTILITY LINES SHALL BE INSTALLED IN ACCORDANCE WITH THE FOLLOWING STANDARDS IN ADDITION TO OTHER APPLICABLE CRITERIA:
   a. NO MORE THAN 500 LINEAR FEET OF TRENCH MAY BE OPENED AT ONE TIME.
   b. EXCAVATED MATERIAL SHALL BE PLACED ON THE UPHILL SIDE OF TRENCHES.
   c. EFFLUENT FROM DEWATERING OPERATIONS SHALL BE FILTERED OR PASSED THROUGH AN APPROVED SEDIMENT TRAPPING DEVICE, OR BOTH, AND DISCHARGED IN A MANNER THAT DOES NOT ADVERSELY AFFECT FLOWING STREAMS OR OFF-SITE PROPERTY.
   d. MATERIAL USED FOR BACKFILLING TRENCHES SHALL BE PROPERLY COMPACTED IN ORDER TO MINIMIZE EROSION AND PROMOTE STABILIZATION.
   e. RESTABILIZATION SHALL BE ACCOMPLISHED IN ACCORDANCE WITH THIS CHAPTER.
   f. APPLICABLE SAFETY REQUIREMENTS SHALL BE COMPLIED WITH.

17\. WHERE CONSTRUCTION VEHICLE ACCESS ROUTES INTERSECT PAVED OR PUBLIC ROADS, PROVISIONS SHALL BE MADE TO MINIMIZE THE TRANSPORT OF SEDIMENT BY VEHICULAR TRACKING ONTO THE PAVED SURFACE. WHERE SEDIMENT IS TRANSPORTED ONTO A PAVED OR PUBLIC ROAD SURFACE, THE ROAD SURFACE SHALL BE CLEANED THOROUGHLY AT THE END OF EACH DAY. SEDIMENT SHALL BE REMOVED FROM THE ROADS BY SHOVELING OR SWEEPING AND TRANSPORTED TO A SEDIMENT CONTROL DISPOSAL AREA. STREET WASHING SHALL BE ALLOWED ONLY AFTER SEDIMENT IS REMOVED IN THIS MANNER. THIS PROVISION SHALL APPLY TO INDIVIDUAL DEVELOPMENT LOTS AS WELL AS TO LARGER LAND-DISTURBING ACTIVITIES.

18\. ALL TEMPORARY EROSION AND SEDIMENT CONTROL MEASURES SHALL BE REMOVED WITHIN 30 DAYS AFTER FINAL SITE STABILIZATION OR AFTER THE TEMPORARY MEASURES ARE NO LONGER NEEDED, UNLESS OTHERWISE AUTHORIZED BY THE LOCAL PROGRAM AUTHORITY. TRAPPED SEDIMENT AND THE DISTURBED SOIL AREAS RESULTING FROM THE DISPOSITION OF TEMPORARY MEASURES SHALL BE PERMANENTLY STABILIZED TO PREVENT FURTHER EROSION AND SEDIMENTATION.

19\. PROPERTIES AND WATERWAYS DOWNSTREAM FROM DEVELOPMENT SITES SHALL BE PROTECTED FROM SEDIMENT DEPOSITION, EROSION AND DAMAGE DUE TO INCREASES IN VOLUME, VELOCITY AND PEAK FLOW RATE OF STORMWATER RUNOFF FOR THE STATED FREQUENCY STORM OF 24-HOUR DURATION IN ACCORDANCE WITH THE FOLLOWING STANDARDS AND CRITERIA. STREAM RESTORATION AND RELOCATION PROJECTS THAT INCORPORATE NATURAL CHANNEL DESIGN CONCEPTS THAT ARE NOT MAN-MADE CHANNELS AND SHALL BE EXEMPT FROM ANY FLOW RATE CAPACITY AND VELOCITY REQUIREMENTS FORNATURAL OR MAN-MADE CHANNELS:
   a. CONCENTRATED STORMWATER RUNOFF LEAVING A DEVELOPMENT SITE SHALL BE DISCHARGED DIRECTLY INTO AN ADEQUATE NATURAL OR MAN-MADE RECEIVING CHANNEL, PIPE OR STORM SEWER SYSTEM. FOR THOSE SITES WHERE RUNOFF IS DISCHARGED INTO A PIPE OR PIPE SYSTEM, DOWNSTREAM STABILITY ANALYSES AT THE OUTFALL OF THE PIPE OR PIPE SYSTEM SHALL BE PERFORMED.
   b. ADEQUACY OF ALL CHANNELS AND PIPES SHALL BE VERIFIED IN THE FOLLOWING MANNER:
      (1) THE APPLICANT SHALL DEMONSTRATE THAT THE TOTAL DRAINAGE AREA TO THE POINT OF ANALYSIS WITHIN THE CHANNEL IS ONE HUNDRED TIMES GREATER THAN THE CONTRIBUTING DRAINAGE AREA OF THE PROJECT IN QUESTION; OR
      (2) (a) NATURAL CHANNELS SHALL BE ANALYZED BY THE USE OF A TWO-YEAR STORM TO VERIFY THAT STORMWATER WILL NOT OVERTOP CHANNEL BANKS NOR CAUSE EROSION OF CHANNEL BED OR BANKS; AND
      (b) ALL PREVIOUSLY CONSTRUCTED MAN-MADE CHANNELS SHALL BE ANALYZED BY THE USE OF A TEN-YEAR STORM TO VERIFY THAT STORMWATER WILL NOT OVERTOP ITS BANKS AND BY THE USE OF A TWO-YEAR STORM TO DEMONSTRATE THAT STORMWATER WILL NOT CAUSE EROSION OF CHANNEL BED OR BANKS; AND
      (c) PIPES AND STORM SEWER SYSTEMS SHALL BE ANALYZED BY THE USE OF A TEN-YEAR STORM TO VERIFY THAT STORMWATER WILL BE CONTAINED WITHIN THE PIPE OR SYSTEM.
   c. IF EXISTING NATURAL RECEIVING CHANNELS OR PREVIOUSLY CONSTRUCTED MAN-MADE CHANNELS OR PIPES ARE NOT ADEQUATE, THE APPLICANT SHALL:
      (1) IMPROVE THE CHANNEL TO A CONDITION WHERE A TEN-YEAR STORM WILL NOT OVERTOP THE BANKS AND A TWO-YEAR STORM WILL NOT CAUSE EROSION TO THE CHANNEL, BED OR BANKS; OR
      (2) IMPROVE THE PIPE OR PIPE SYSTEM TO A CONDITION WHERE THE TEN-YEAR STORM IS CONTAINED WITHIN THE APPURTENANCES; OR
      (3) DEVELOP A SITE DESIGN THAT WILL NOT CAUSE THE PRE-DEVELOPMENT PEAK RUNOFF RATE FROM A TWO-YEAR STORM TO INCREASE WHEN RUNOFF OUTFALLS INTO A NATURAL CHANNEL OR WILL NOT CAUSE THE PRE-DEVELOPMENT PEAK RUNOFF RATE FROM A TEN-YEAR STORM TO INCREASE WHEN RUNOFF OUTFALLS INTO A MAN-MADE CHANNEL; OR
      (4) PROVIDE A COMBINATION OF CHANNEL IMPROVEMENT, STORMWATER DETENTION OR OTHER MEASURES WHICH IS SATISFACTORY TO THE PLAN-APPROVING AUTHORITY TO PREVENT DOWNSTREAM EROSION.
   d. THE APPLICANT SHALL PROVIDE EVIDENCE OF PERMISSION TO MAKE THE IMPROVEMENTS.
   e. ALL HYDROLOGIC ANALYSES SHALL BE BASED ON THE EXISTING WATERSHED CHARACTERISTICS AND THE ULTIMATE DEVELOPMENT CONDITION OF THE SUBJECT PARCEL.
   f. IF THE APPLICANT CHOOSES AN OPTION THAT INCLUDES STORMWATER DETENTION HE SHALL OBTAIN APPROVAL FROM THE LOCALITY OF A PLAN FOR MAINTENANCE OF THE DETENTION FACILITIES. THE PLAN SHALL SET FORTH THE MAINTENANCE REQUIREMENTS OF THE FACILITY AND THE PERSON RESPONSIBLE FOR PERFORMING THE MAINTENANCE.
   g. OUTFALL FROM A DETENTION FACILITY SHALL BE DISCHARGED TO A RECEIVING CHANNEL, AND ENERGY DISSIPATERS SHALL BE PLACED AT THE OUTFALL OF ALL DETENTION FACILITIES AS NECESSARY TO PROVIDE A STABILIZED TRANSITION FROM THE FACILITY TO THE RECEIVING CHANNEL.
   h. ALL ON-SITE CHANNELS MUST BE VERIFIED TO BE ADEQUATE.
   i. INCREASED VOLUMES OF SHEET FLOWS THAT MAY CAUSE EROSION OR SEDIMENTATION ON ADJACENT PROPERTY SHALL BE DIVERTED TO A STABLE OUTLET, ADEQUATE CHANNEL, PIPE OR PIPE SYSTEM, OR TO A DETENTION FACILITY.
   j. IN APPLYING THE STORMWATER RUNOFF CRITERIA, INDIVIDUAL LOTS OR PARCELS IN A RESIDENTIAL, COMMERCIAL OR INDUSTRIAL DEVELOPMENT SHALL NOT BE CONSIDERED TO BE SEPARATE DEVELOPMENT PROJECTS. INSTEAD, THE DEVELOPMENT, AS A WHOLE, SHALL BE CONSIDERED TO BE A SINGLE DEVELOPMENT PROJECT. HYDROLOGIC PARAMETERS THAT REFLECT THE ULTIMATE DEVELOPMENT CONDITION SHALL BE USED IN ALL ENGINEERING CALCULATIONS.
   k. ALL MEASURES USED TO PROTECT PROPERTIES AND WATERWAYS SHALL BE EMPLOYED IN A MANNER WHICH MINIMIZES IMPACTS ON THE PHYSICAL, CHEMICAL AND BIOLOGICAL INTEGRITY OF RIVERS, STREAMS AND OTHER WATERS OF THE STATE.
   l. ANY PLAN APPROVED PRIOR TO JULY 1, 2014, THAT PROVIDES FOR STORMWATER MANAGEMENT THAT ADDRESSES ANY FLOW RATE CAPACITY AND VELOCITY REQUIREMENTS FOR NATURAL OR MAN-MADE CHANNELS SHALL SATISFY THE FLOW RATE CAPACITY AND VELOCITY REQUIREMENTS FOR NATURAL OR MAN-MADE CHANNELS IF THE PRACTICES ARE DESIGNED TO (i) DETAIN THE WATER QUALITY VOLUME AND TO RELEASE IT OVER 48 HOURS; (ii) DETAIN AND RELEASE OVER A 24-HOUR PERIOD THE EXPECTED RAINFALL RESULTING FROM THE ONE YEAR, 24-HOUR STORM; AND (iii) REDUCE THE ALLOWABLE PEAK FLOW RATE RESULTING FROM THE 1.5, 2, AND 10-YEAR, 24-HOUR STORMS TO A LEVEL THAT IS LESS THAN OR EQUAL TO THE PEAK FLOW RATE FROM THE SITE ASSUMING IT WAS IN A GOOD FORESTED CONDITION, ACHIEVED THROUGH MULTIPLICATION OF THE FORESTED PEAK FLOW RATE BY A REDUCTION FACTOR THAT IS EQUAL TO THE RUNOFF VOLUME FROM THE SITE WHEN IT WAS IN A GOOD FORESTED CONDITION DIVIDED BY THE RUNOFF VOLUME FROM THE SITE IN ITS PROPOSED CONDITION, AND SHALL BE EXEMPT FROM ANY FLOW RATE CAPACITY AND VELOCITY REQUIREMENTS FOR NATURAL OR MAN-MADE CHANNELS AS DEFINED IN ANY REGULATIONS PROMULGATED PURSUANT TO § 62.1-44.15:54 OR 62.1-44.15:65 OF THE ACT.
   m. FOR PLANS APPROVED ON AND AFTER JULY 1, 2014, THE FLOW RATE CAPACITY AND VELOCITY REQUIREMENTS OF § 62.1-44.15:52 A OF THE ACT AND THIS SUBSEQUENT SECTION SHALL BE SATISFIED BY THE COMPLIANCE OF THE WATER QUANTITY REQUIREMENTS IN THE STORMWATER MANAGEMENT ACT (§ 62.1-44.15:24 ET SEQ. OF THE CODE OF VIRGINIA) AND ATTENDANT REGULATIONS, UNLESS SUCH LAND-DISTURBING ACTIVITIES ARE IN ACCORDANCE WITH 9VAC25-870-48 OF THE VIRGINIA STORMWATER MANAGEMENT PROGRAM (VSMP) REGULATIONS.
   n. COMPLIANCE WITH THE WATER QUANTITY MINIMUM STANDARDS SET OUT IN 9VAC25-870-66 OF THE VIRGINIA STORMWATER MANAGEMENT PROGRAM (VSMP) REGULATIONS SHALL BE DEEMED TO SATISFY THE REQUIREMENTS OF SUBDIVISION 19 OF THIS SUBSECTION.

Sequence of Construction

THE FOLLOWING OUTLINES THE GENERAL CONSTRUCTION SEQUENCE THAT WILL BE EMPLOYED DURING THE SITE CONSTRUCTION STAGE:

1. A PRE-CONSTRUCTION MEETING MUST TAKE PLACE PRIOR TO ANY LAND DISTURBING ACTIVITIES. THE OWNER'S REPRESENTATIVE, ENGINEER, EROSION CONTROL INSPECTOR, AND CONTRACTOR MUST BE PRESENT AT THIS MEETING. THE CONTRACTOR SHALL GIVE THE CITY INSPECTOR ((804)646-0770)) TWO WORKING DAYS NOTIFICATION.
2. A CERTIFIED RESPONSIBLE LAND DISTURBER (RLD) IS REQUIRED DURING ALL STAGES OF CONSTRUCTION, FROM THE INITIAL LAND DISTURBANCE THROUGH FINAL SITE STABILIZATION. THE NAME OF THE PROJECT RLD MUST BE PROVIDED BEFORE ANY LAND DISTURBANCE MAY BEGIN.
3. THE CONTRACTOR WILL BE RESPONSIBLE FOR SCHEDULING AND CONDUCTING ALL NECESSARY INSPECTIONS WITH THE APPROPRIATE LOCAL AND STATE OFFICIALS. COORDINATION WITH THE APPROPRIATE ENTITIES WILL BE PERFORMED BY THE CONTRACTOR.
4. PRIOR TO STARTING ANY OTHER WORK ON THE SITE, THE CONTRACTOR SHALL INSTALL PERIMETER CONTROL EROSION CONTROL MEASURES AS SHOWN ON THE PHASE I PLANS AND AS IDENTIFIED IN FEDERAL, STATE AND LOCAL APPROVAL DOCUMENTS PERTAINING TO THIS PROJECT. THE CONTRACTOR SHALL GIVE THE EROSION AND SEDIMENT CONTROL INSPECTOR 1 WEEK NOTIFICATION PRIOR TO COMMENCING WORK.
5. ONCE PERIMETER CONTROLS ARE IN PLACE, AND APPROVED BY THE INSPECTOR, BEGIN DEMOLITION, TO INCLUDE CLEARING AND GRUBBING. ANY TREES OUTSIDE THE LIMITS OF WORK ARE TO REMAIN.
6. DURING CONSTRUCTION, SOIL STABILIZATION ON SITE SHALL CONFORM TO THE CITY OF RICHMOND STANDARD EROSION CONTROL NOTES AND THE VIRGINIA EROSION AND SEDIMENT CONTROL HANDBOOK (VESCH), LATEST EDITION.
7. CONTRACTOR SHALL INSPECT AND MAINTAIN EROSION CONTROL MEASURES, AND REMOVE SEDIMENT THEREFROM ON A WEEKLY BASIS AND WITHIN 12 HOURS AFTER EACH STORM EVENT AND DISPOSE OF THE SEDIMENTS IN AN UPLAND AREA SUCH THAT THEY DO NOT ENCUMBER OTHER DRAINAGE STRUCTURES AND PROTECTED AREAS.
8. CONTRACTOR SHALL PROVIDE POSITIVE SURFACE DRAINAGE FROM GRADING OPERATIONS TO ADJACENT STORM SEWER STRUCTURES IF POSSIBLE. INLET PROTECTION TO BE PROVIDED FOR ALL STORM STRUCTURES AND INSPECTED AND MAINTAINED ON A WEEKLY BASIS.
9. CONTRACTOR SHALL BE FULLY RESPONSIBLE TO CONTROL CONSTRUCTION SUCH THAT SEDIMENTATION SHALL NOT AFFECT REGULATORY PROTECTED AREAS, WHETHER SUCH SEDIMENTATION IS CAUSED BY WATER, WIND OR DIRECT DEPOSIT.
10. COMMENCE ROUGH GRADING OPERATIONS. APPLY TEMPORARY SEEDING WITHIN 7 DAYS TO DENUDED AREAS THAT MAY NOT BE AT FINAL GRADE BUT WILL REMAIN DORMANT FOR PERIODS LONGER THAN 14 DAYS. APPLY PERMANENT SEEDING TO AREAS THAT WILL REMAIN DORMANT FOR MORE THAN 1 YEAR.
11. INSTALL PROPOSED STORM SEWER SYSTEM WITH INLET PROTECTION, AS REQUIRED.
12. UNDERGROUND UTILITY INSTALLATION FOR WATER AND SANITARY SEWER CONNECTIONS MAY BEGIN. CONTRACTOR SHALL COORDINATE UTILITY CONNECTIONS WITH THE CITY OF RICHMOND DEPARTMENT OF PUBLIC UTILITIES.
13. FINE GRADE SWALES, SIDEWALKS, ROADWAYS, AND BIKE TRAIL IMPROVEMENTS. INSTALL SITE WALLS AND CURBING THROUGHOUT SITE.
14. COMPACT SUBGRADE WITHIN HARDSCAPED AREAS. INSTALL SUBBASE AND HARDSCAPING PER PLANS.
15. INSTALL LANDSCAPING AND PERMANENT GROUND STABILIZATION.
16. UPON STABILIZATION OF THE ENTIRE SITE AND APPROVAL BY THE INSPECTOR, ALL EROSION AND SEDIMENT CONTROL MEASURES CAN BE REMOVED. CONTRACTOR SHALL CLEAN SEDIMENT AND DEBRIS FROM PAVEMENTS AND DRAINAGE SYSTEMS.

vhb.com
vhb
115 South 15th Street
Suite 200
Richmond, VA 23219
804.343.7100

Intermediate Terminal Phase 2 - Public Access
3101 Wharf Street
Richmond, Virginia

No.	Revision	Date	Appvd.

Designed by | Checked by

Issued for: Permitting
Date: June 22, 2018

Drawing Title: **Erosion Control Notes**

COMMONWEALTH OF VIRGINIA
JOHN P. CARTY
Lic. No. 039452
6/22/18
PROFESSIONAL ENGINEER

Drawing Number: **C5.02**

Sheet of

Project Number: 33965.20

\\vhb\proj\Richmond\33965.20 intermed. term. phase ii\cad\dd\Planset\33965.20-DT.dwg

PURPOSE

9VAC25-870-54 of the Virginia Stormwater Management Program (VSMP) Permit Regulations requires that Stormwater Pollution Prevention Plan (SWPPP) be developed for all regulated land disturbing activities. The SWPPP must include, but not be limited to, an approved erosion and sediment control plan, an approved stormwater management plan, and this **Pollution Prevention Plan** (PPP) for regulated land disturbing activities, and a description of any additional control measures necessary to address a TMDL, as applicable.

The plan for implementing pollution prevention measures during construction activities developed on this sheet must be implemented and updated as necessary. Any PPP requirements not included on this sheet must be incorporated into the SWPPP required by 9VAC25-870-54 that must be developed before land disturbance commences. This PPP identifies potential sources of pollutants that may reasonable be expected to affect the quality stormwater discharges from the construction site (both on- and off-site activities) and describes control measures that will be used to minimize pollutants in stormwater discharges from the construction site.

OTHER REFERENCED PLANS

SWPPP requirements may be fulfilled by incorporating, by reference, other plans. All plans incorporated by reference become enforceable under the VSMP Permit Regulations and General Permit VAR10 for Discharges of Stormwater from Construction Activities. If a plan incorporated by reference does not contain all of the required elements of the PPP, the operator must develop the missing elements and include them in the SWPPP.

Independent Plans Incorporated by Reference	Date Approved
Stormwater Management Plans (Regional or Master)	N/A
Spill Prevention, Control, and Countermeasure Plans	N/A
Off-Site Stockpile	N/A
Off-Site Borrow Area	N/A

POTENTIAL POLLUTANT SOURCES

The following sources of potential pollutants must be addressed in the Pollution Prevention Plan. Various controls and/or measures designed to prevent and/or minimize pollutants in stormwater discharges from the project site must be applied to the sources found on the site. Additional information concerning the following controls and/or measures may be found in the SWPPP. Deviations from the location criteria may be approved by the City of Richmond Site Inspector.

LEAKS, SPILLS, AND OTHER RELEASES

- ✓ The operator(s) shall ensure procedures are in place to prevent and respond to all leaks, spills and other releases of pollutants.
- ✓ The operator(s) shall ensure all leaks, spills and other releases of pollutant are contained and cleaned immediately upon discovery. Any contaminated materials are to be disposed in accordance with federal, state, and/or local requirements.
- ✓ The operator(s) shall ensure spill containment kits containing appropriate materials (e.g., absorbent material and pads, brooms, gloves, sand, etc.) are available at appropriate locations, including, but not limited to: designated areas for vehicle and equipment maintenance; vehicle and equipment fueling; storage and disposal of construction materials, products, and waste; and storage and disposal of hazardous and toxic materials; and sanitary waste facilities.
- ✓ The locations of the spill containment kits are identified as described below:

Date	Shown on Plan Sheet #(s)	Location
Approved Plan	C2.02	WITHIN CONTRACTOR STAGING AREA.
REVISIONS TO LOCATIONS		
Date	Shown on Plan Sheet #(s)	Location	Operator(s) Initials

- ✓ The operator(s) shall notify the Department of Environmental Quality of leaks, spills, and other releases that discharge to or have the potential to discharge to surface waters immediately upon discovery of the discharge but in no case later than 24 after the discovery.
- ✓ The operator(s) shall notify the Department of Environmental Quality (DEQ) of leaks, spills, and other releases that discharge to or have the potential to discharge to surface waters immediately upon discovery of the discharge but in no case later than 24 after the discovery. Written notice of the discharge must be sent to DEQ and the City of Richmond Department of Public Utilities within five (5) days of the discovery.

Virginia Department of Environmental Quality Piedmont Regional Office 4949-A Cox Road Glen Allen, VA 23060 (804) 527-5020 (phone) (804) 527-5106 (fax) or on-line	City of Richmond Department of Public Utilities Water Resources 730 East Broad Street, 6th Floor Richmond, VA 23219 (804) 646-7586 (phone)

EQUIPMENT / VEHICLE WASHING

- ✓ Washing must be conducted in a ***dedicated area*** that is located to maximize the distance from storm drain inlets, ditches, waterbodies or wetlands but no less than 50 feet from those features.
- ✓ All wash water used in vehicle wheel washing must be directed to a sediment basin/trap.
- ✓ All vehicle washing activities other than wheel washing must have secondary containment.
- ✓ Each facility must have appropriate signage to inform users where the ***dedicated area(s)*** are located.

Activity	Location of ***Dedicated Area(s)***	Shown on Plan Sheet #(s)	Water Source Location
Wheel Wash	STAGING AREA	C2.02	ON-SITE HYDRANT
Other Wash Areas	STAGING AREA	C2.02	ON-SITE HYDRANT
REVISIONS TO LOCATIONS			
Activity	Location of ***Dedicated Area(s)***	Shown on Plan Sheet #(s)	Water Source Location	Operator's Initials

VEHICLE FUELING AND MAINTENANCE

- ✓ Conduct regular maintenance in a ***dedicated area*** that is located to maximize the distance from storm drain inlets, ditches, waterbodies or wetlands but no less than 50 feet from those features.
- ✓ If fueling is conducted at a ***dedicated area***, the location must be located to maximize the distance from storm drain inlets, ditches, waterbodies or wetlands but no less than 50 feet from those features.
- ✓ The ***dedicated areas*** must be designed to eliminate the discharge of spilled and leaked fuels and chemicals from vehicle fueling and maintenance activities by providing secondary containment (spill berms, decks, spill containment pallets, providing cover where appropriate, and having spill kits readily available).
- ✓ Each facility must have appropriate signage to inform users where the ***dedicated area(s)*** are located.

Date	Shown on Plan Sheet #(s)	Location of ***Dedicated Area(s)***
Approved Plan	C2.02	WITHIN CONTRACTOR STAGING AREA.
REVISIONS TO LOCATIONS		
Date	Shown on Plan Sheet #(s)	Location of ***Dedicated Area(s)***	Operator's Initials

- ✓ If mobile fueling will be used, the fueling must be done in an area that located to maximize the distance from storm drain inlets, ditches, waterbodies or wetlands but no less than 50 feet from those features.
- ✓ Spill kits must be readily available at all mobile fueling locations.
- ✓ On-site storage tanks must have a means of secondary containment (spill berms, decks, spill containment pallets, etc.) and must be covered where appropriate.
- ✓ All vehicles on site must be monitored for leaks and receive regular preventive maintenance to reduce the chance of leakage.

DISCHARGE FROM STORAGE, HANDLING, AND DISPOSAL OF CONSTRUCTION PRODUCTS, MATERIALS, AND WASTE

- ✓ Storage of construction products, materials, and waste is to be conducted in ***dedicated areas***.
- ✓ The ***dedicated area*** must be located to maximize the distance from storm drain inlets, ditches, waterbodies or wetlands but no less than 50 feet from those features. Separations of less than 50 feet may be approved by the Environmental Inspector.
- ✓ The ***dedicated areas*** must be designed to minimize the discharge of pollutants from storage, handling, and disposal of construction products, materials and wastes including (i) building products such as asphalt sealants, copper flashing, roofing materials, adhesives, concrete admixtures; (ii) pesticides, herbicides, insecticides, fertilizers, and landscape materials; and (iii) construction and domestic wastes such as packaging materials, scrap construction materials, masonry products, timber, pipe and electrical cuttings, plastics, Styrofoam, concrete and other trash or building products.
- ✓ Each facility must have appropriate signage to inform users where the ***dedicated area(s)*** are located.

Date	Shown on Plan Sheet #(s)	Location(s) of ***Dedicated Area(s)*** for storage of construction products and materials
Approved Plan	C2.02	WITHIN CONTRACTOR STAGING AREA.
REVISIONS TO LOCATIONS		
Date	Shown on Plan Sheet #(s)	Location(s) of ***Dedicated Area(s)*** for storage of construction products and materials	Operator(s) Initials

Date	Shown on Plan Sheet #(s)	Location(s) of ***Dedicated Area(s)*** for waste from construction products and materials
Approved Plan	C2.02	WITHIN CONTRACTOR STAGING AREA.
REVISIONS TO LOCATIONS		
Date	Shown on Plan Sheet #(s)	Location(s) of ***Dedicated Area(s)*** for waste from construction products and materials	Operator(s) Initials

- ✓ Follow all federal, state, and local requirements that apply to the use, handling and disposal of pesticides, herbicides, and fertilizers.
- ✓ Keep chemicals on-site in small quantities and in closed, well marked containers.
- ✓ Clean up solid waste, including building materials, garbage, and debris on a daily basis and deposit into covered dumpsters that are periodically emptied.
- ✓ Schedule waste collection to prevent exceeding the capacity of onsite containers. Additional containers may be necessary depending on the phase of construction (e.g., demolition, etc.)
- ✓ Dispose of all solid waste at an authorized disposal site.
- ✓ Ensure that containers have lids or are otherwise protected from exposure to precipitation.

DISCHARGES FROM OTHER POTENTIAL POLLUTANT SOURCES

- ✓ Discharges from other pollutant sources (e.g., water line flushing, storm sewer flushing, above ground storage tanks, etc.) not mentioned elsewhere must be addressed.

Other Potential Pollutant Sources	Location(s) of Potential Pollutant Sources

- ✓ Above ground oil storage tanks with a storage capacity exceeding 1,320 gallons and have a reasonable expectation of a discharge into or upon Waters of the United States are required to have a Spill Prevention Control and Countermeasure (SPCC) Plan.
- ✓ The discharge of contaminated flush water and material removed during flushing operations must be collected and disposed of in accordance with appropriate federal, state, and local requirements.

DISCHARGES FROM CONCRETE RELATED WASH ACTIVITIES

- ✓ Concrete trucks are not allowed to wash out or discharge surplus concrete or drum wash water on site except in a ***dedicated area(s)*** that is located to prevent discharge to storm drain inlets, ditches, waterbodies or wetlands but no less than 50 feet from those features.
- ✓ Each facility must have a stabilized access to prevent mud tracking into the street.
- ✓ Each facility must have appropriate signage to inform users where the ***dedicated area(s)*** are located.

Date	Shown on Plan Sheet #(s)	Location of ***Dedicated Area(s)***
Approved Plan	C2.02	WITHIN CONTRACTOR STAGING AREA.
REVISIONS TO LOCATIONS		
Date	Shown on Plan Sheet #(s)	Location of ***Dedicated Area(s)***	Operator's Initials

- ✓ Facilities must be cleaned, or new facilities constructed, once the washout area is two-thirds (2/3) full.

BELOW GRADE CONCRETE WASHOUT AREA

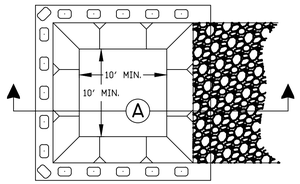

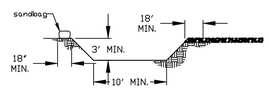

SECTION A

ABOVE GRADE CONCRETE WASHOUT AREA

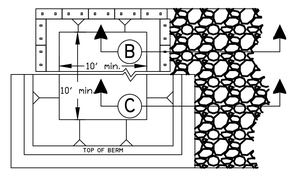

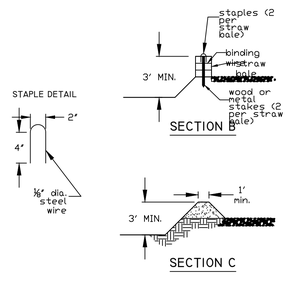

SECTION B

SECTION C

CONCRETE WASHOUT AREA NOTES

- ✓ The facility must be lined with 10 mil plastic lining that is free from holes, tears, or other defects that might compromise the material's impermeability.
- ✓ The lining must be anchored with staples (2' spacing) or sandbags.
- ✓ Side slopes must be 1:1 (horizontal:vertical) or flatter.
- ✓ Stone access must be provided between the street and the concrete washout area.
- ✓ A "Concrete Washout" sign must be installed within 30 feet of the washout facility. The sign must be no smaller than 2' tall by 4' wide.

DISCHARGES OF SOAPS, DETERGENTS, SOLVENTS, AND WASH WATER FROM CONSTRUCTION ACTIVITIES SUCH AS CLEANUP OF STUCCO, PAINT, FORM RELEASE OILS, AND CURING COMPOUNDS

- ✓ Washing activities associated with construction activities other than vehicle and equipment washing, such as clean up of stucco, paint, form release oils, and curing compounds are to be conducted in a ***dedicated area***.
- ✓ The ***dedicated area*** must be located to maximize the distance from storm drain inlets, ditches, waterbodies or wetlands but no less than 50 feet from those features. Separations of less than 50 feet may be approved by the Environmental Inspector.
- ✓ The ***dedicated areas*** must be designed to prevent the discharge of soaps, detergents, solvents, and wash water.

Date	Shown on Plan Sheet #(s)	Location(s) of ***Dedicated Area(s)***
Approved Plan	C2.02	WITHIN CONTRACTOR STAGING AREA.
REVISIONS TO LOCATIONS		
Date	Shown on Plan Sheet #(s)	Location(s) of ***Dedicated Area(s)***	Operator(s) Initials

- ✓ The ***dedicated area*** must be covered (e.g., plastic sheeting, temporary roof, etc.) to prevent contact with stormwater.
- ✓ The contaminated wastewater from the ***dedicated area*** must be collected for disposal by a waste hauler or discharged to the sanitary sewer.
- ✓ In situations where these pollutants are or could be generated at locations other than at the ***designated area*** (e.g., concrete pours, building washing, etc.), cover (e.g., plastic sheeting, temporary roof, etc.) must be provided to prevent contact with stormwater and the contaminated wastewater from the activity must be collected for disposal by a waste hauler or discharged to the sanitary sewer.

DISCHARGES OF HAZARDOUS, TOXIC, AND SANITARY WASTE

- ✓ Storage and disposal of hazardous, toxic and sanitary wastes are to be conducted in ***dedicated areas***.
- ✓ The ***dedicated areas*** must be located to maximize the distance from storm drain inlets, ditches, waterbodies or wetlands but no less than 50 feet from those features. Separations of less than 50 feet may be approved by the Environmental Inspector.
- ✓ The ***dedicated areas*** must be designed to prevent the discharge of hazardous, toxic and sanitary waste by avoiding contact with precipitation
- ✓ Each facility must have appropriate signage to inform users where the ***dedicated area(s)*** are located.

Date	Shown on Plan Sheet #(s)	Location(s) of ***Dedicated Area(s)*** for storage and disposal of hazardous and toxic wastes
Approved Plan	C2.02	WITHIN CONTRACTOR STAGING AREA.
REVISIONS TO LOCATIONS		
Date	Shown on Plan Sheet #(s)	Location(s) of ***Dedicated Area(s)*** for storage and disposal of hazardous and toxic wastes	Operator(s) Initials

Date	Shown on Plan Sheet #(s)	Location(s) of ***Dedicated Area(s)*** for portable toilets
Approved Plan	C2.02	WITHIN CONTRACTOR STAGING AREA.
REVISIONS TO LOCATIONS		
Date	Shown on Plan Sheet #(s)	Location(s) of ***Dedicated Area(s)*** for portable toilets	Operator(s) Initials

- ✓ Consult with local waste management authorities or private firms about the requirements for disposing of hazardous materials and/or soils that may be contaminated with hazardous materials.
- ✓ Never remove the original product label from the container. Follow the manufacturer's recommended method of disposal.
- ✓ Schedule periodic pumping of portable toilets and dispose of waste
- ✓ Dispose of all solid waste at an authorized disposal site.

SWPPP MODIFICATIONS AND REVISIONS

The operator(s) shall ensure the SWPPP is modified and/or revised to reflect:

- ✓ Changes in qualified personnel; delegated authorities or other personnel required as a condition of the General Construction Permit;
- ✓ Changes in site conditions;
- ✓ Changes in the design, construction, operation, or maintenance of the construction site that affect the potential for discharges of pollutants that are not addressed in the normal implementation of the plan; and
- ✓ Ineffective control measures identified during inspections or investigations conducted by the operator's qualified personnel or local, state or federal officials.

Modifications/revisions to the SWPPP shall include additional or modified control measures to address the identified deficiencies.

If the necessary modifications/revisions require approval by the Administrator or DEQ, the modifications/revisions must be implemented no later than seven (7) calendar days following approval.

If the necessary modifications/revisions do not require approval by the Administrator, the modifications/revisions must be implemented prior to the next anticipated storm event or as soon as practicable.

SWPPP UPDATES

The operator(s) shall update the SWPPP to include:

- ✓ A record of dates when 1) major grading activities occur, 2) construction activities temporarily or permanently cease on a portion of the site, and 3) stabilization measures are initiated;
- ✓ Documentation of modifications and revisions to the SWPPP;
- ✓ Areas that have reached final stabilization where no further SWPPP or inspection requirements apply;
- ✓ All properties that are no longer under the legal control of the operator and the dates on which the operator no longer had legal control over each property; and
- ✓ The date, volume, and corrective/preventative actions implemented for any prohibited discharge.

The operator(s) shall update the SWPPP no later than seven (7) days following any of the situations identified above.

OPERATOR INSPECTIONS

The operator(s) identified below shall provide for inspections of the permitted land-disturbing activities by the qualified personnel identified below. The inspections will be conducted (select one the following options):

☐ at least once every four (4) business days; or
☐ at least once every five (5) business days *and* no later than 48 hours following any measurable storm event.

Where areas are in a stabilized condition or runoff is unlikely due to winter conditions, the inspection frequency may be reduced to once every 30 days while these conditions exist. Otherwise, the operator(s) shall resume the regular inspection frequency identified above.

The operator(s) shall provide for inspections of the permitted land-disturbing activity to ensure implementation and continued maintenance of all requirements of the Stormwater Pollution Prevention Plan (Erosion and Sediment Control Plan, Stormwater Management Plan, Pollution Prevention Plan, TMDL requirements, etc.).

Records of the required inspections must be maintained and included in the SWPPP binder. The qualified personnel are encouraged to use the Operator Inspection form provided in the SWPPP binder to document the required inspections. If inspections are conducted once every five (5) business days *and* no later than 48 hours following any measureable storm event, the location of the rain gauge used to determine the amount of rain must be included in the SWPPP and documented in the inspection report.

ACKNOWLEDGEMENTS

I certify under penalty of law that I:

a. have been designated by the Operator to conduct inspections of the permitted site;
b. am knowledgeable in the principles and practices of erosion and sediment control and stormwater management;
c. possess the skills to assess conditions at the permitted site for the Operator(s) that could impact stormwater quality and quantity;
d. will assess the effectiveness of any erosion and sediment control measures or stormwater management facilities selected to control the stormwater discharges from the permitted site; and
e. will conduct inspections in accordance with the frequency noted above in the OPERATOR INSPECTIONS section of this sheet.

QUALIFIED PERSONNEL	
Name (print)	
Phone	
Additional information is located in Tab 6 of the SWPPP Binder	

As the Operator(s), I/we understand that prior to initiating land disturbance, the potential pollutant sources, appropriate control measures, and all responsible parties (operator, qualified inspection personnel, contractors, etc.) required as a condition of the General Construction Permit (GCP) and the Stormwater Pollution Prevention Plan (SWPPP) must be identified. I also understand this information must be updated as necessary throughout all phases of construction until the GCP is terminated.

Furthermore,

I/we certify under penalty of law that I/we have read and understand all requirements of the SWPPP (erosion and sediment control plan, stormwater management plan, pollution prevention plan, TMDL provisions, administrative requirements, etc.) and GCP and that the information herein is, to the best of my knowledge and belief, true, accurate, and complete. I am aware that there are significant penalties for submitting false information, including the possibility of fine or imprisonment for knowing violations.

I/we understand that I/we are ultimately responsible for compliance with all conditions and requirements of the SWPPP and GCP and for ensuring all contractors and subcontractors on the permitted site are aware of the conditions and requirements of the SWPPP and GCP.

I/we shall comply with all conditions and requirements of the SWPPP and shall at all times properly operate and maintain all measures and control (and related appurtenances) which are installed or used to achieve compliance with the conditions of the GCP. Proper opration and maintenance also includes adequate funding and adequate staffing.

I/we shall take all reasonable steps to minimize or prevent any discharge in violation of the SWPPP and/or GCP.

I/we understand that if it determined by the Department of Environmental Quality (DEQ) in consultation with the State Water Control Board at any time that stormwater discharges are causing, have reasonable potential to cause, or contribute to and excursion above any applicable water quality standard, the DEQ may, in consultation with the Administrator, take appropriate enforcement action and require:

a. Modification of control measures to adequately address water quality concerns;
b. Submission of valid and verifiable data and information that are representative of ambient conditions and indicate that the receiving water is attaining water quality standards; or
c. Cessation of discharges of pollutants from construction activity and submit an individual permit application according to 9VAC25-870-410.

OPERATOR(S) / DELEGATED AUTHORITY		
Name (print)	Signature	Date

Additional contact information can be found in the SWPPP Binder

POLLUTION PREVENTION PLAN

CITY OF RICHMOND
DEPARTMENT OF PUBLIC UTILITIES

vhb.com
vhb
115 South 15th Street
Suite 200
Richmond, VA 23219
804.343.7100

Intermediate Terminal Phase 2 - Public Access
3101 Wharf Street
Richmond, Virginia

No.	Revision	Date	Appvd.

Designed by | Checked by
Issued for: Permitting | Date: June 22, 2018

Drawing Title
City of Richmond
Pollution Prevention Plan

Drawing Number
C5.03

Sheet of

Project Number
33965.20

COMMONWEALTH OF VIRGINIA
JOHN P. CARTY
Lic. No. 039452
6/22/18
PROFESSIONAL ENGINEER

Saved Friday, June 22, 2018 4:47:02 PM CVAUGHAN Plotted Friday, June 22, 2018 4:52:43 PM Vaughan, Charlie

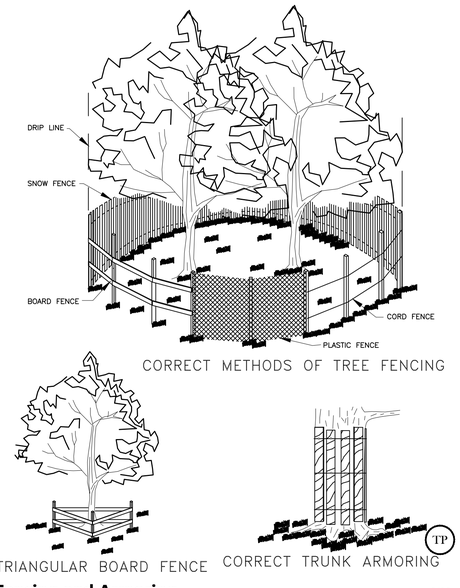

Fencing and Armoring

6/08

N.T.S. Source: Virginia Erosion and Sediment Control Handbook PL 3.38.2

TABLE 3.32-E
(Revised June 2003)
PERMANENT SEEDING SPECIFICATIONS FOR COASTAL PLAIN AREA

SEED[1]		
LAND USE	**SPECIES**	**APPLICATION RATES**
Minimum Care Lawn (Commercial or Residential)	Tall Fescue[1] **or** Bermudagrass[1]	175 - 200 lbs.
		75 lbs.
High-Maintenance Lawn	Tall Fescue[1] **or** Bermudagrass[1] (seed) **or** Bermudagrass[1] (by other vegetative establishment method, see Std. & Spec. 3.34)	200-250 lbs.
		40 lbs. (unhulled) 30 lbs. (hulled)
General Slope (3:1 or less)	Tall Fescue[1] Red Top Grass or Creeping Red Fescue Seasonal Nurse Crop[2]	128 lbs. 2 lbs. 20 lbs. TOTAL: 150 lbs.
Low-Maintenance Slope (Steeper than 3:1)	Tall Fescue[1] Bermudagrass[1] Red Top Grass or Creeping Red Fescue Seasonal Nurse Crop[2] Sericea Lespedeza[3]	93-108 lbs. 0-15 lbs. 2 lbs. 20 lbs. 20 lbs. TOTAL: 150 lbs.

1 - When selecting varieties of turfgrass, use the Virginia Crop Improvement Association (VCIA) recommended turfgrass variety list. Quality seed will bear a label indicating that they are approved by VCIA. A current turfgrass variety list is available at the local County Extension office or through VCIA at 804-746-4884 or at http://sudan.cses.vt.edu/html/Turf/turf/publications/publications2.html

2 - Use seasonal nurse crop in accordance with seeding dates as stated below:

February, March - April	Annual Rye
May 1st - August	Foxtail Millet
September, October - November 15th	Annual Rye
November 16th - January	Winter Rye

3 - May through October, use hulled seed. All other seeding periods, use unhulled seed. If Weeping Lovegrass is used, include in any slope or low maintenance mixture during warmer seeding periods, increase to 30 -40 lbs/acre.

FERTILIZER & LIME

- Apply 10-20-10 **fertilizer** at a rate of **500** lbs. / acre (or 12 lbs. / 1,000 sq. ft.)
- Apply **Pulverized Agricultural Limestone** at a rate of 2 tons/acre (or 90 lbs. / 1,000 sq. ft.)

NOTE:
- A soil test is necessary to determine the actual amount of lime required to adjust the soil pH of site.
- Incorporate the lime and fertilizer into the top 4 – 6 inches of the soil by disking or by other means.
- When applying Slowly Available Nitrogen, use rates available in Erosion & Sediment Control Technical Bulletin # 4, 2003 Nutrient Management for Development Sites at http://www.dcr.state.va.us/sw/e&s.htm#pubs

PS

Permanent Seeding Specifications

06/03

N.T.S. Source: Virginia Erosion And Sediment Control Handbook PL 3.32-E

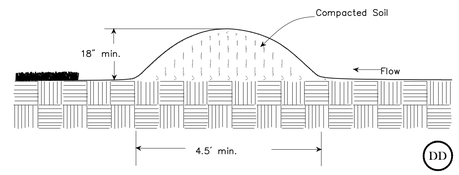

Temporary Diversion Dike

6/08

N.T.S. Source: Virginia Erosion and Sediment Control Handbook Plate 3.09-1

TABLE 3.31-B
(Revised June 2003)
TEMPORARY SEEDING SPECIFICATIONS
QUICK REFERENCE FOR ALL REGIONS

SEED		
APPLICATION DATES	**SPECIES**	**APPLICATION RATES**
Sept. 1 - Feb. 15	50/50 Mix of Annual Ryegrass (Iolium multi-florum) & Cereal (Winter) Rye (Secale cereale)	50 -100 (lbs/acre)
Feb. 16 - Apr. 30	Annual Ryegrass (Iolium multi-florum)	60 - 100 (lbs/acre)
May 1 - Aug. 31	German Millet	50 (lbs/acre)

FERTILIZER & LIME

- Apply 10-10-10 **fertilizer** at a rate of 450 lbs. / acre (or 10 lbs. / 1,000 sq. ft.)
- Apply **Pulverized Agricultural Limestone** at a rate of 2 tons/acre (or 90 lbs. / 1,000 sq. ft.)

TS

NOTE:
1 - A soil test is necessary to determine the actual amount of lime required to adjust the soil pH of site.
2 - Incorporate the lime and fertilizer into the top 4 – 6 inches of the soil by disking or by other means.
3 - When applying Slowly Available Nitrogen, use rates available in Erosion & Sediment Control Technical Bulletin # 4, 2003 Nutrient Management for Development Sites at http://www.dcr.state.va.us/sw/e&s.htm#pubs

Temporary Seeding Specifications

06/03

N.T.S. Source: Virginia Erosion And Sediment Control Handbook PL 3.31-B

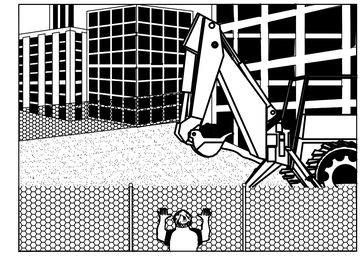

Perspective View

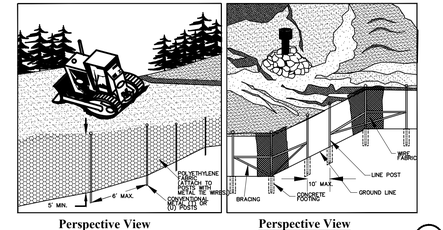

Perspective View Plastic Fence | **Perspective View Metal Fence**

SAF

Safety Fence

06/08

N.T.S. Source: Virginia Erosion And Sediment Control Handbook PL 3.01-1

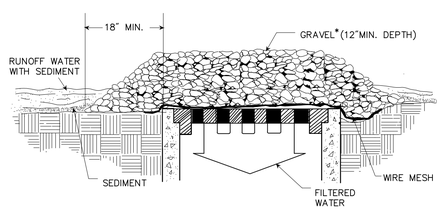

Specific Application

THIS METHOD OF INLET PROTECTION IS APPLICABLE WHERE HEAVY CONCENTRATED FLOWS ARE EXPECTED BUT NOT WHERE PONDING AROUND THE STRUCTURE MIGHT CAUSE EXCESSIVE INCONVENIENCE OR DAMAGE TO ADJACENT STRUCTURES AND UNPROTECTED AREAS.

* GRAVEL SHALL BE VDOT #3, #357 OR #5 COARSE AGGREGATE.

IP

Gravel And Wire Mesh Drop Inlet Sediment Filter

06/08

N.T.S. Source: Virginia Erosion And Sediment Control Handbook PL 3.07-2

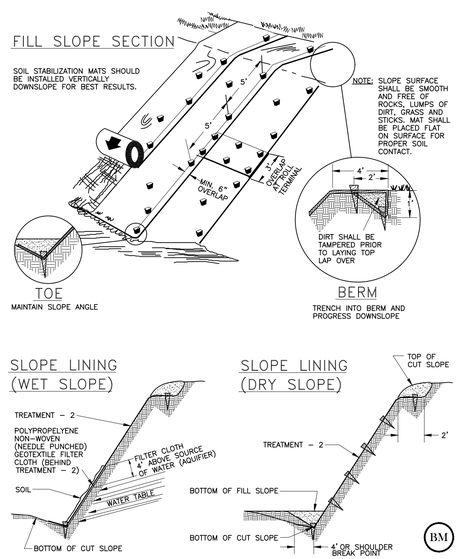

Typical Treatment Soil Stabilization Matting Slope Installation

06/08

N.T.S. Source: Virginia Erosion And Sediment Control Handbook PL 3.36-5

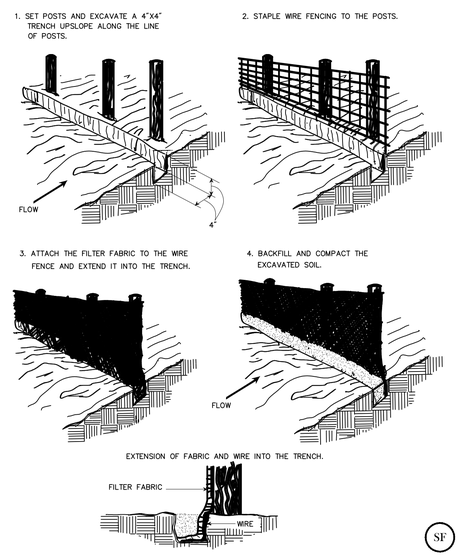

Construction Of A Silt Fence (With Wire Support)

06/08

N.T.S. Source: Virginia Erosion And Sediment Control Handbook PL 3.05-1

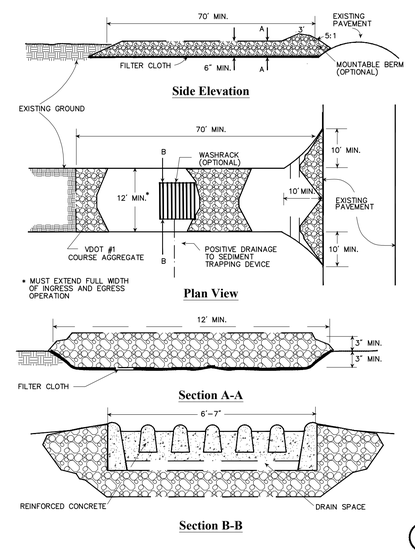

Stone Construction Entrance

06/08

N.T.S. Source: Virginia Erosion And Sediment Control Handbook PL 3.02-1

vhb.com
115 South 15th Street
Suite 200
Richmond, VA 23219
804.343.7100

Intermediate Terminal Phase 2 - Public Access

3101 Wharf Street
Richmond, Virginia

No.	Revision	Date	Appvd.

Designed by | Checked by

Issued for: Permitting

Date: June 22, 2018

Drawing Title: Erosion Control Details

Drawing Number: C5.04

Sheet of

Project Number: 33965.20

COMMONWEALTH OF VIRGINIA
JOHN P. CARTY
Lic. No. 039452
6/22/18
PROFESSIONAL ENGINEER

Saved Friday, June 22, 2018 4:47:02 PM CVAUGHAN Plotted Friday, June 22, 2018 4:52:53 PM Vaughan, Charlie

vhb.com
115 South 15th Street
Suite 200
Richmond, VA 23219
804.343.7100

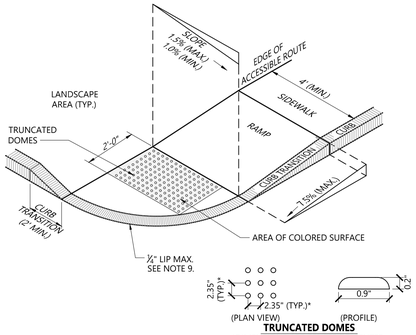

TRUNCATED DOMES

*DIMENSIONS ARE CENTER TO CENTER

NOTES

1. THE MAXIMUM ALLOWABLE SIDEWALK AND CURB RAMP CROSS SLOPES SHALL BE 1.5 (1% MIN.).
2. THE MAXIMUM ALLOWABLE SLOPE OF ACCESSIBLE ROUTE EXCLUDING CURB RAMPS SHALL BE 5%.
3. THE MAXIMUM ALLOWABLE SLOPE OF ACCESSIBLE ROUTE AT CURB RAMPS SHALL BE 7.5%.
4. A MINIMUM OF 3 FEET CLEAR SHALL BE MAINTAINED AT ANY PERMANENT OBSTACLE IN ACCESSIBLE ROUTE (I.E., HYDRANTS, UTILITY POLES, TREE WELLS, SIGNS, ETC.).
5. CURB TREATMENT VARIES, SEE PLANS FOR CURB TYPE.
6. RAMP, CURB AND ADJACENT PAVEMENTS SHALL BE GRADED TO PREVENT PONDING.
7. SEE TYPICAL SIDEWALK SECTION FOR RAMP CONSTRUCTION.
8. WHERE ACCESSIBLE ROUTES ARE LESS THAN 5' IN WIDTH (EXCLUDING CURBING) A 5' x 5' PASSING AREA SHALL BE PROVIDED AT INTERVALS NOT TO EXCEED 200 FEET.
9. ELIMINATE CURBING AT RAMP WHERE IT ABUTS ROADWAY, EXCEPT WHERE VERTICAL CURBING IS INDICATED ON THE DRAWINGS TO BE INSTALLED AND SET FLUSH.
10. DETECTABLE WARNINGS SHALL CONTRAST VISUALLY WITH ADJOINING SURFACES.
11. DETECTABLE WARNINGS SHALL BE INSTALLED PERPENDICULAR TO THE ACCESSIBLE ROUTE.
12. CONTRACTOR TO SUBMIT R.F.I. FOR THIS TYPE OF ACCESSIBLE CURB RAMP FOR APEX ROADWAY CROSSINGS.

Accessible Curb Ramp (ACR) - Type 'B-D'

1/16

N.T.S. Source: VHB LD_501

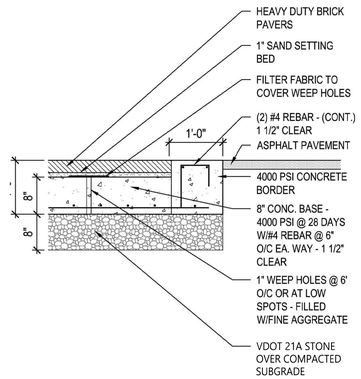

Brick Pavers in Vehicular Area

N.T.S. Source: VHB

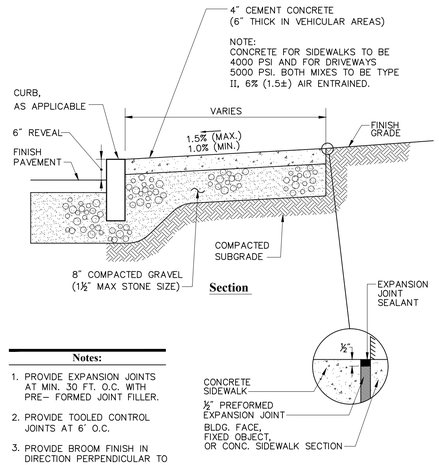

Notes:

1. PROVIDE EXPANSION JOINTS AT MIN. 30 FT. O.C. WITH PRE– FORMED JOINT FILLER.
2. PROVIDE TOOLED CONTROL JOINTS AT 6' O.C.
3. PROVIDE BROOM FINISH IN DIRECTION PERPENDICULAR TO CURB.

Expansion Joint Detail

Concrete Sidewalk

04/11

N.T.S. Source: VHB LD_420

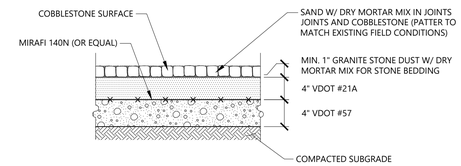

COBBLESTONE SECTION

NOTES

1. SECTION LISTED IS THE MINIMUM REQUIREMENT. CONTRACTOR SHALL MATCH THE EXISTING PAVEMENT SECTION, IF MORE STRINGENT.

Cobblestone Pavement Section

N.T.S. Source: VHB REV

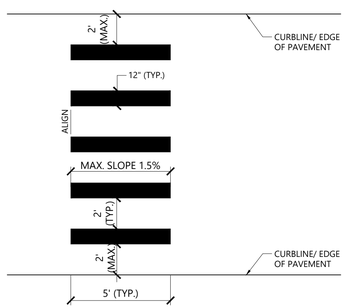

NOTES

1. TWELVE INCH (12") LINES SHALL BE APPLIED IN ONE APPLICATION, NO COMBINATION OF LINES (TWO - 6 INCH LINES) WILL BE ACCEPTED.
2. LONGITUDINAL CROSSWALK LINES TO BE PARALLEL TO CURBLINE.
3. ALL LONGITUDINAL CROSSWALK LINES TO BE THE SAME LENGTH AND PROPERLY ALIGNED.
4. CROSS WALK SIDESLOPE SHALL NOT EXCEED 1.5%.

Crosswalk

1/16

N.T.S. Source: VHB REV LD_553

CG-7: COMBINATION 4" CURB AND GUTTER

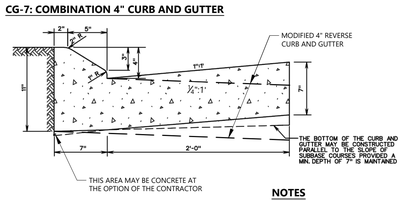

CG-3: STANDARD 4" CURB

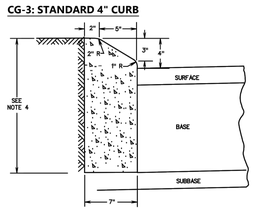

NOTES

1. THESE ITEMS MAY BE PRECAST OR CAST IN PLACE.
2. CONCRETE TO BE CLASS A3 IF CAST IN PLACE, 4,000 PSI IF PRECAST.
3. CURB HAVING A RADIUS OF 300 FEET OR LESS (ALONG FACE OF CURB) WILL BE PAID FOR AS RADIAL CURB.
4. THE DEPTH OF CG-3 CURB MAY BE REDUCED AS MUCH AS 3" (13" DEPTH) OR INCREASED AS MUCH AS 3" (19" DEPTH) IN ORDER THAT THE BOTTOM OF CURB WILL COINCIDE WITH THE TOP OF A COURSE OF THE PAVEMENT SUBSTRUCTURE. OTHERWISE THE DEPTH IS TO BE 16" AS SHOWN. NO ADJUSTMENT IN THE PRICE BID IS TO BE MADE FOR A DECREASE OR INCREASE IN DEPTH.
4. CG-7 IS FOR USE WITH STABILIZED OPEN-GRADED DRAINAGE LAYER, THE BOTTOM OF THE CURB AND GUTTER SHALL BE CONSTRUCTED PARALLEL TO THE SLOPE OF SUBBASE COURSES AND TO THE DEPTH OF THE PAVEMENT.
5. ALLOWABLE CRITERIA FOR THE USE OF CG-3 AND CG-7 IS BASED ON ROADWAY CLASSIFICATION AND DESIGN SPEED AS SHOWN IN APPENDIX A OF THE VDOT ROAD DESIGN MANUAL IN THE SECTION ON URBAN GS STANDARDS.
6. WHEN THIS STANDARD IS TO BE TIED INTO EXISTING BARRIER CURB, THE TRANSITION IS TO BE MADE WITHIN 10' OR THE CHANGE IN STANDARDS MADE AT REGULAR OPENINGS.
7. WHEN COMBINATION MOUNTABLE CURB AND GUTTER IS USED, THE STANDARD ENTRANCE GUTTERS OR STANDARD CONNECTION FOR STREET INTERSECTIONS ARE TO HAVE THE MOUNTABLE CURB CONFIGURATION INCORPORATED.

VDOT Standard Mountable Curb and Gutter

09/06

N.T.S. Source: VDOT 201.02 and 201.04

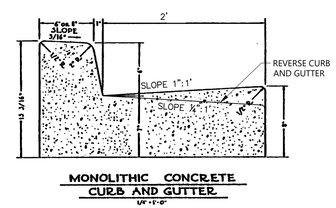

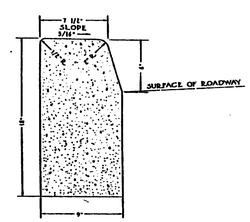

NOTES

1. ANY EXISTING CONCRETE CURB DAMAGED DURING CONSTRUCTION SHALL BE REPLACED IN ACCORDANCE WITH CITY OF RICHMOND DETAIL.

City of Richmond Concrete Curb and Gutters

06/03

N.T.S. Source: City of Richmond - Department of Public Works N-14000

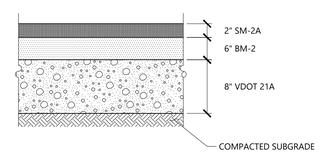

STANDARD DUTY FLEXIBLE PAVEMENT

NOTES

1. PAVEMENT SECTION IS BASED ON CITY OF RICHMOND MINIMUM AND IS SUBJECT TO CHANGE BASED ON FURTHER GEOTECHNICAL INVESTIGATIONS.
2. FOR PAVEMENT REPLACEMENT, SECTION LISTED IS THE MINIMUM REQUIREMENT. CONTRACTOR SHALL MATCH THE EXISTING PAVEMENT SECTION, IF MORE STRINGENT.

Bituminous Concrete Pavement Sections

1/16

N.T.S. Source: VHB REV LD_430

Intermediate Terminal Phase 2 - Public Access

3101 Wharf Street
Richmond, Virginia

No.	Revision	Date	Appvd.

Designed by | Checked by

Issued for: Permitting

Date: June 22, 2018

Drawing Title: Details

Drawing Number: C6.01

Sheet of

Project Number: 33965.20

COMMONWEALTH OF VIRGINIA
JOHN P. CARTY
Lic. No. 039452
6/22/18
PROFESSIONAL ENGINEER

Saved Friday, June 22, 2018 4:47:02 PM CVAUGHAN Plotted Friday, June 22, 2018 4:53:03 PM Vaughan, Charlie

vhb.com

115 South 15th Street
Suite 200
Richmond, VA 23219
804.343.7100

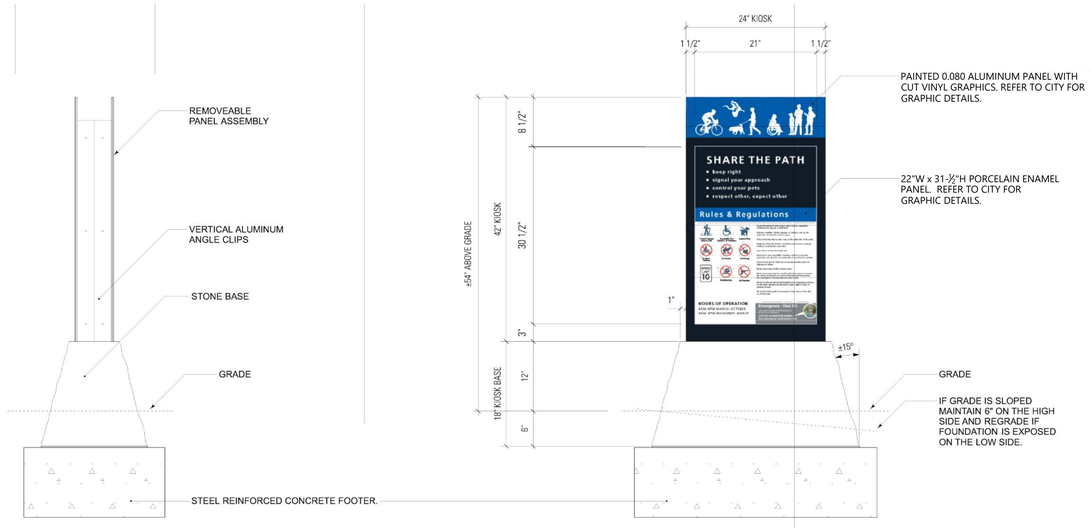

Monument Signage

N.T.S. Source: City of Richmond

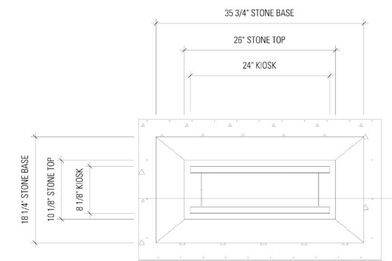

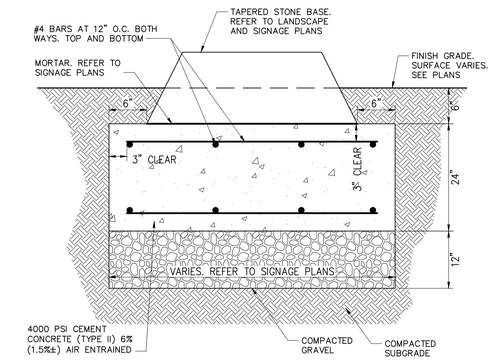

Concrete Footer for Signage

06/08

N.T.S. Source: VHB LD_170

GR-2, 2A

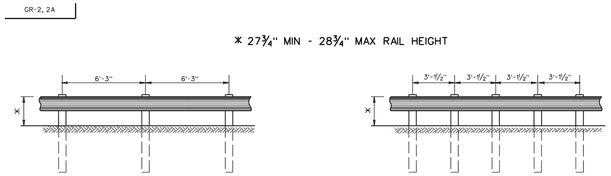

GR-2
(6'-3" POST SPACING)
MAX DYNAMIC DEFLECTION - 3'

GR-2A
(3'-11½" POST SPACING)
MAX DYNAMIC DEFLECTION - 2'

* OPTIONAL GR-2A METHOD USING NESTED RAIL

* OPTIONAL GR-2A METHOD USING ADDITIONAL RAIL ON BACK OF POST

* WHEN NESTED RAIL OR ADDITIONAL RAIL IS PLACED ON BACK OF POST FOR GR-2A THE POST SPACING WILL BE 6'-3".

NOTES:

GUARDRAIL LOCATIONS SHOWN ON PLANS ARE APPROXIMATE ONLY AND CAN BE ADJUSTED DURING CONSTRUCTION IF AND AS DIRECTED BY THE ENGINEER.

FOR DETAILS OF POST AND BLOCKOUTS SEE SHEET NO. 501.05.

FOR DETAILS OF RAIL ELEMENT, RAIL SPLICE JOINT, AND ASSOCIATED HARDWARE SEE SHEET NOS. 501.01 AND 501.02.

RAIL ELEMENTS ARE FURNISHED SHOP CURVED FOR RADII BETWEEN 5 FEET AND 150 FEET.

ALL GUARDRAIL POSTS SHALL BE SET PLUMB. POST SHALL NOT BE SET WITH A VARIATION OF MORE THAN ½" PER FOOT FROM VERTICAL. W-BEAM, BLOCKOUTS, AND POSTS SHALL BE SET AND ALIGNED WITHOUT ALTERATION OR FORCE, AS PER SECTION 505 OF THE SPECIFICATIONS.

ALL GR-2 AND GR-2A RAIL SHALL BE MAINTAINED AT A HEIGHT OF 27¾" MIN - 28¾" MAX AS MEASURED PER STANDARD GR-INS.

ALL W-BEAM RAILS SHALL BE LAPPED IN THE DIRECTION OF VEHICULAR TRAVEL FOR THE FINISHED ROADWAY.

THE OPTIONAL GR-2A METHODS OF NESTING THE RAIL OR USE OF AN ADDITIONAL RAIL ON THE BACK OF THE POST FOR STANDARD GR-2A SHALL BE APPROVED BY THE ENGINEER PRIOR TO INSTALLATION.

FLARE RATES			
DESIGN SPEED	INSIDE SHY LINE		BEYOND SHY LINE
MPH	SHY LINE LS	FLARE RATE	FLARE RATE
70	9'	30:1	15:1 *
60	8'	26:1	14:1 *
50	6.5'	21:1	11:1 *
40	5'	16:1	8:1 *
30	4'	13:1	7:1 *

* SUGGESTED MAXIMUM FLARE RATE FOR SEMI-RIGID BARRIER SYSTEMS.

GR-2 Standard Bocked Out W-Beam Guardrail

08/14

N.T.S. Source: VDOT 501.04

GR-7

NOTES:

1. GUARDRAIL TERMINAL, STD. GR-7 IS TO BE SRT 350 (SIMILAR TO AS SHOWN) MANUFACTURED BY TRINITY INDUSTRIES, THE FLEAT 350 MANUFACTURED BY ROAD SYSTEMS, INC., OR OTHER VDOT APPROVED EQUAL MEETING NCHRP 350 TESTING CRITERIA.
2. ALL TERMINALS SHALL BE INSTALLED ACCORDING TO THE MANUFACTURER'S INSTALLATION INSTRUCTIONS AND THE FOLLOWING VDOT REQUIREMENTS:

   A. ALL STANDARD GR-7 TERMINALS SHALL BE INSTALLED WITH A 4 FT. OFFSET.

   B. YELLOW 8" X 36" REFLECTIVE SHEETING, IN ACCORDANCE WITH VDOT SPECIFICATIONS, SHOULD BE APPLIED IN TERMINALS EMPLOYING W-BEAM END SECTIONS. FOR TERMINALS EMPLOYING IMPACT (EXTRUDER) HEADS, AMBER (YELLOW) REFLECTIVE SHEETING WITH BLACK DIAGONAL STRIPES SHOULD BE APPLIED TO THE FULL AREA INSIDE THE IMPACT HEAD WITH THE DIRECTION OF THE BLACK DIAGONAL STRIPES CONFORMING TO CURRENT MUTCD APPLICATION FOR TYPE 3 OBJECT MARKERS (OM-3).

   C. DO NOT CHANGE THE LAPPING OF TERMINAL FOR ANY INSTALLATIONS, INSTALL AS SHOWN BELOW REGARDLESS OF ADJACENT TRAFFIC DIRECTION.

   D. HEIGHT MEASURED AT TOP OF W-BEAM IS 27¾" MIN. - 28¾" MAX.
3. IF YOU CANNOT GET THE NECESSARY CLEAR RUNOUT AREA FOR THE GR-7 TERMINAL, CONSIDER ALTERNATIVE TERMINAL OPTIONS.
4. THIS DRAWING IS REPRESENTATIONAL ONLY. DETAILS, DIMENSIONS, QUANTITIES, AND OTHER INFORMATION NOT SHOWN WILL VARY FOR EACH MANUFACTURER. SEE INDIVIDUAL MANUFACTURER'S PLANS FOR THIS INFORMATION.

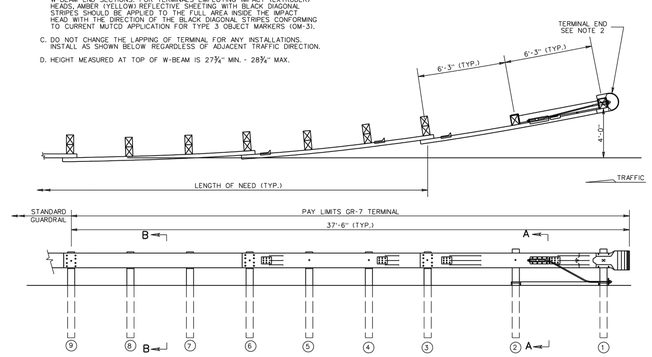

GR-7 Breakaway Cable Terminal

07/12

N.T.S. Source: VDOT 501.11

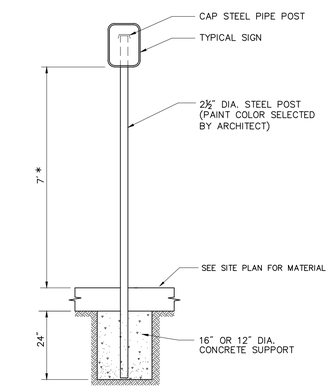

* THIS DIMENSION SHALL BE A MINIMUM OF 5' FOR ACCESSIBLE SIGNAGE.

Sign Post - Type 'A'

01/12

N.T.S. Source: VHB LD_701

Intermediate Terminal Phase 2 - Public Access

3101 Wharf Street
Richmond, Virginia

No.	Revision	Date	Appvd.

Designed by | Checked by

Issued for: Permitting

Date: June 22, 2018

Drawing Title: Details

Drawing Number: C6.02

Sheet of

Project Number: 33965.20

COMMONWEALTH OF VIRGINIA
JOHN P. CARTY
Lic. No. 039452
6/22/18
PROFESSIONAL ENGINEER

Saved Friday, June 22, 2018 4:47:02 PM CVAUGHAN Plotted Friday, June 22, 2018 4:53:13 PM Vaughan, Charlie

vhb.com

115 South 15th Street
Suite 200
Richmond, VA 23219
804.343.7100

LANDSCAPE NOTES

1. ALL PROPOSED PLANTING LOCATIONS SHALL BE STAKED AS SHOWN ON THE PLANS FOR FIELD REVIEW AND APPROVAL BY THE LANDSCAPE ARCHITECT PRIOR TO INSTALLATION.
2. CONTRACTOR SHALL VERIFY LOCATIONS OF ALL BELOW GRADE AND ABOVE GROUND UTILITIES AND NOTIFY OWNERS REPRESENTATIVE OF CONFLICTS.
3. NO PLANT MATERIALS SHALL BE INSTALLED UNTIL ALL GRADING AND CONSTRUCTION HAS BEEN COMPLETED IN THE IMMEDIATE AREA. CONTRACTOR SHALL NOTIFY OWNER'S REPRESENTATIVE OF ANY CONFLICT.
4. A 3-INCH DEEP MULCH PER SPECIFICATION SHALL BE INSTALLED UNDER ALL TREES AND SHRUBS, AND IN ALL PLANTING BEDS, UNLESS OTHERWISE INDICATED ON THE PLANS, OR AS DIRECTED BY OWNER'S REPRESENTATIVE.
5. ALL TREES SHALL BE BALLED AND BURLAPPED, UNLESS OTHERWISE NOTED IN THE DRAWINGS, OR APPROVED BY THE OWNER'S REPRESENTATIVE.
6. FINAL QUANTITY FOR EACH PLANT TYPE SHALL BE AS GRAPHICALLY SHOWN ON THE PLAN. THIS NUMBER SHALL TAKE PRECEDENCE IN CASE OF ANY DISCREPANCY BETWEEN QUANTITIES SHOWN ON THE PLANT LIST AND ON THE PLAN. THE CONTRACTOR SHALL REPORT ANY DISCREPANCIES BETWEEN THE NUMBER OF PLANTS SHOWN ON THE PLANT LIST AND PLANT LABELS PRIOR TO BIDDING.
7. ANY PROPOSED PLANT SUBSTITUTIONS MUST BE REVIEWED AND APPROVED IN WRITING BY THE A/E OR OWNER'S REPRESENTATIVE.
8. ALL PLANT MATERIALS INSTALLED SHALL MEET THE SPECIFICATIONS OF THE "AMERICAN STANDARDS FOR NURSERY STOCK" BY THE AMERICAN ASSOCIATION OF NURSERYMEN AND CONTRACT DOCUMENTS.
9. ALL PLANT MATERIALS SHALL BE GUARANTEED FOR ONE YEAR FOLLOWING DATE OF FINAL ACCEPTANCE.
10. AREAS DESIGNATED "TOPSOIL & SEED" SHALL RECEIVE MINIMUM 6" OF TOPSOIL AND SPECIFIED SEED MIX. LAWNS OVER 2:1 SLOPE SHALL BE PROTECTED WITH EROSION CONTROL FABRIC.
11. ALL DISTURBED AREAS NOT OTHERWISE NOTED ON CONTRACT DOCUMENTS SHALL BE LOAM AND SEEDED OR MULCHED AS DIRECTED BY OWNER'S REPRESENTATIVE.

PLANT MAINTENANCE NOTES

1. CONTRACTOR SHALL PROVIDE COMPLETE MAINTENANCE OF THE LAWNS AND PLANTINGS. NO IRRIGATION IS PROPOSED FOR THIS SITE. THE CONTRACTOR SHALL SUPPLY SUPPLEMENTAL WATERING FOR NEW LAWNS AND PLANTINGS DURING THE ONE YEAR PLANT GUARANTEE PERIOD.
2. CONTRACTOR SHALL PROVIDE ALL MATERIALS, LABOR, AND EQUIPMENT FOR THE COMPLETE LANDSCAPE MAINTENANCE WORK. WATER SHALL BE PROVIDED BY THE CONTRACTOR.
3. WATERING SHALL BE REQUIRED DURING THE GROWING SEASON, WHEN NATURAL RAINFALL IS BELOW ONE INCH PER WEEK.
4. WATER SHALL BE APPLIED IN SUFFICIENT QUANTITY TO THOROUGHLY SATURATE THE SOIL IN THE ROOT ZONE OF EACH PLANT.
5. CONTRACTOR SHALL REPLACE DEAD OR DYING PLANTS AT THE END OF THE ONE YEAR GUARANTEE PERIOD. CONTRACTOR SHALL TURN OVER MAINTENANCE TO THE FACILITY MAINTENANCE STAFF AT THAT TIME.

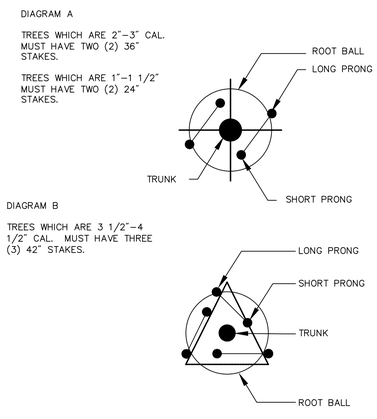

Below-Grade Tree Stabilizing System Detail 11/12

N.T.S. Source: VHB

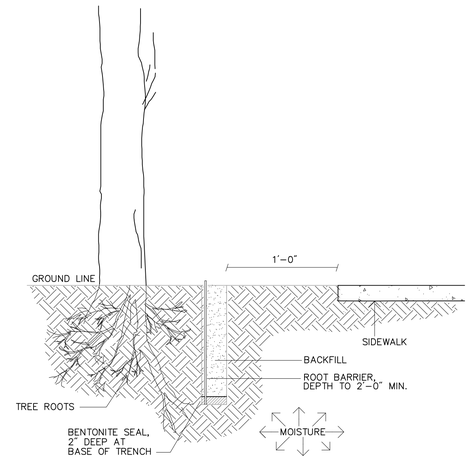

Root Barrier Detail 10/12

N.T.S. Source: VHB

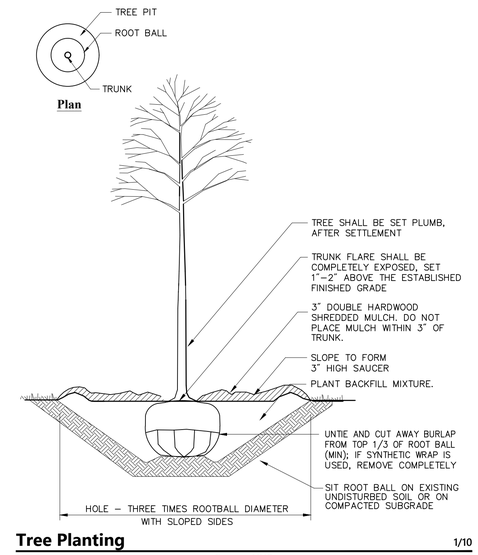

Tree Planting 1/10

N.T.S. Source: VHB LD_602

CUT FROM 1' TO 14.99' INCL.			
PIPE SIZE	THICKNESS OF PIPE (SEE NOTE 2)	TRENCH WIDTH (FT)	CY PER FT OF DEPTH PER FT OF LENGTH
6"	0.180	2.75	0.100
8"	0.240	2.75	0.100
12"	0.300	2.75	0.100
15"	0.360	2.79	0.103
18"	0.437	3.08	0.114

CUT FROM 15' TO 29.99' INCL.			
PIPE SIZE	THICKNESS OF PIPE (SEE NOTE 2)	TRENCH WIDTH (FT)	CY PER FT OF DEPTH PER FT OF LENGTH
6"	0.180	3.00	0.110
8"	0.240	3.00	0.110
12"	0.300	3.17	0.117
15"	0.360	3.46	0.128
18"	0.437	3.75	0.139

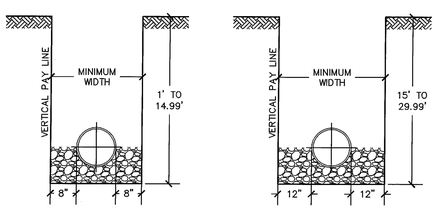

NOTES:

1. ALLOWABLE EXCAVATIONS ARE IN CUBIC YARDS PER FT. OF DEPTH PER FT. OF LENGTH.
2. DIMENSIONS ALLOWED FOR SEWER EXCAVATIONS FOR SDR 35 PVC.
3. FOR DEPTHS GREATER THAN 30' CONTACT THE TECHNICAL SERVICES DIVISION OF DPU FOR ALLOWABLE EXCAVATIONS.

Pipeline Excavation 02/09

N.T.S. Source: City of Richmond - Department of Public Utilities P-1A

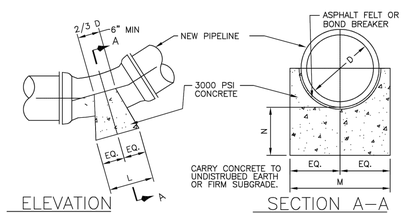

PIPE	11 1/4" BEND			22 1/2" BEND			45" BEND		
SIZE	L	M	N	L	M	N	L	M	N
4"	6"	1'–0"	8"	8"	1'–0"	8"	1'–1"	1'–2"	8"
6"	6"	1'–2"	8"	10"	1'–2"	8"	1'–2"	1'–2"	8"
8"	8"	1'–4"	8"	11"	1'–4"	8"	1'–9"	1'–4"	8"
10"	8"	1'–6"	8"	1'–3"	1'–6"	9"	2'–5"	1'–6"	1'–0"
12"	8"	2'–0"	8"	1'–4"	2'–0"	9"	2'–8"	2'–0"	1'–2"
16"	1'–1"	2'–4"	9"	2'–1"	2'–4"	1'–0"	4'–0"	2'–4"	1'–6"
18"	1'–5"	2'–8"	10"	2'–9"	2'–8"	1'–2"	5'–6"	2'–8"	2'–0"
20"	1'–5"	2'–8"	10"	2'–9"	2'–8"	1'–2"	5'–6"	2'–8"	2'–0"
24"	1'–10"	3'–0"	1'–0"	3'–7"	3'–0"	1'–4"	6'–0"	3'–6"	2'–6"

NOTES:
1. BLOCKING DIMENSIONS SHOWN ARE MINIMUMS.
2. BLOCKING DIMENSIONS ARE BASED ON A STATIC PRESSURE OF 150 PSI AND AN ALLOWABLE SOIL BEARING CAPACITY OF 2000 PSF.
3. WHERE SOIL BEARING CAPACITY IS LESS THAN 2000 PSF, SUBMIT BLOCKING DESIGN CALCULATIONS.
4. THRUST BLOCKS FOR LOWER VERTICAL BENDS MAY BE DELETED WITH RESTRAINED JOINTS. THE ENGINEER SHALL CALCULATE LENGTH OF RESTRAINED SECTION.

Blocking Detail 6/29/04

N.T.S. Source: City of Richmond DPU M-8

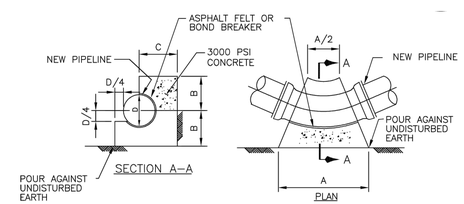

		BUTTRESS FOR HORIZONTAL BENDS DIAMETER (D)								
BEND	DIM.	4"	6"	8"	10"	12"	16"	18"	20"	24"
11 1/4°	A	6"	8"	8"	1'–1"	1'–4"	1'–9"	1'–9"	1'–9"	2'–0"
	B	6"	7"	8"	9"	10"	1'–0"	1'–3"	1'–6"	1'–6"
	C	6"	7"	7"	8"	9"	9"	10"	1'–0"	1'–0"
22 1/2°	A	8"	10"	1'–4"	1'–7"	2'–0"	2'–6"	3'–3"	3'–3"	3'–9"
	B	6"	7"	8"	10"	10"	1'–0"	1'–3"	1'–6"	1'–6"
	C	7"	8"	9"	10"	1'–0"	1'–3"	1'–6"	1'–6"	1'–6"
45°	A	1'–1"	1'–4"	2'–0"	2'–6"	3'–3"	4'–3"	6'–0"	6'–0"	7'–0"
	B	6"	7"	8"	10"	11"	1'–3"	1'–3"	1'–6"	1'–8"
	C	7"	8"	9"	10"	1'–0"	1'–3"	1'–4"	1'–9"	1'–9"
90°	A	1'–10"	2'–3"	3'–3"	3'–9"	5'–0"	6'–0"	8'–0"	8'–0"	9'–9"
	B	7"	8"	9"	1'–0"	1'–0"	1'–4"	1'–8"	2'–0"	2'–0"
	C	1'–0"	1'–6"	1'–6"	1'–6"	1'–6"	1'–9"	1'–9"	2'–0"	2'–0"

NOTES:
1. BLOCKING DIMENSIONS SHOWN ARE MINIMUMS.
2. BLOCKING DIMENSIONS ARE BASED ON A STATIC PRESSURE OF 150 PSI AND AN ALLOWABLE SOIL BEARING CAPACITY OF 2000 PSF.
3. WHERE SOIL BEARING CAPACITY IS LESS THAN 2000 PSF, SUBMIT BLOCKING DESIGN CALCULATIONS.
4. THRUST BLOCKS FOR HORIZONTAL BENDS MAY BE DELETED WITH RESTRAINED JOINTS. THE ENGINEER SHALL CALCULATE LENGTH OF RESTRAINED SECTION.

Buttress for Horizontal Bends 6/28/04

N.T.S. Source: City of Richmond DPU M-5

DEPARTMENT OF PUBLIC UTILITIES
RICHMOND, VIRGINIA

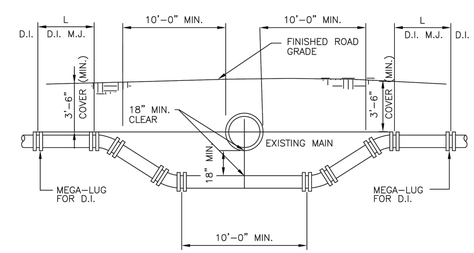

NOTES:
1. LOWERED SECTION TO BE OF DUCTILE IRON MECHANICAL JOINT PIPE WITH RESTRAINED JOINTS AT ANY INCLUDED JOINTS. THE ENGINEER SHALL CALCULATE LENGTH (L) OF RESTRAINED SECTION.
2. THRUST BLOCKS FOR VERTICAL BENDS MAY BE DELETED WITH RESTRAINED JOINTS.
3. VERTICAL BENDS MAY BE ELIMINATED BY USING JOINT DEFLECTIONS. JOINT DEFLECTIONS SHALL NOT EXCEED 1/2 MANUFACTURERS RECOMMENDED DEFLECTION.

Waterline Adjustment for Existing Utility 06/04

N.T.S. Source: City of Richmod DPU M-13

Intermediate Terminal Phase 2 - Public Access

3101 Wharf Street
Richmond, Virginia

No.	Revision	Date	Appvd.

Designed by | Checked by

Issued for: Permitting
Date: June 22, 2018

Drawing Title: Details

Drawing Number: C6.03

Sheet of

Project Number: 33965.20

COMMONWEALTH OF VIRGINIA
JOHN P. CARTY
Lic. No. 039452
6/22/18
PROFESSIONAL ENGINEER

Saved Friday, June 22, 2018 4:47:02 PM CVAUGHAN Plotted Friday, June 22, 2018 4:53:23 PM Vaughan, Charlie

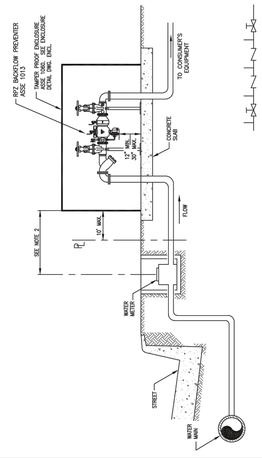

NOTES:

1. RESILIENT SEATED SHUT-OFF VALVES AND TESTCOCKS ARE REQUIRED.
2. NO CONNECTIONS SHALL BE ALLOWED BETWEEN METER AND BACKFLOW PREVENTER.

NOTE: THE MECHANICAL BACKFLOW PREVENTION ASSEMBLY SHALL BE INSTALLED SUBJECT TO THE APPROVAL OF THE CITY OF RICHMOND DPU. ANY DEVIATION FROM THE METHODS DESCRIBED ABOVE MUST RECEIVE APPROVAL PRIOR TO INSTALLATION. ALL MECHANICAL BACKFLOW PREVENTION ASSEMBLIES APPROVED BY THE CITY OF RICHMOND DPU FOR INSTALLATION AT THE SERVICE CONNECTION SHALL BE IN ACCORDANCE WITH THE CROSS CONNECTION CONTROL AND BACKFLOW PREVENTION PROGRAM.

Domestic Backflow Prevention Assembly

4/06

N.T.S. Source: City of Richmond DPU RKFLWASSM

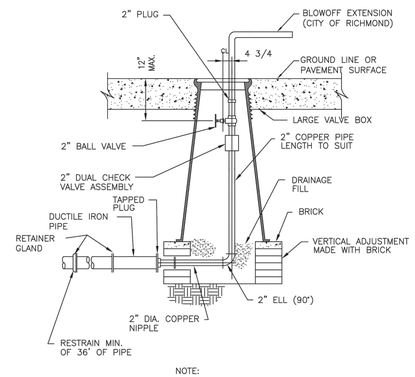

NOTE:

1. USE OF DEAD END FLUSHING HYDRANTS LIMITED TO PIPE 4" AND SMALLER. PROVIDE FIRE HYDRANT ON PIPES LARGER THAN 4".
2. IN GRASS AREA PROVIDE 1'-6" SQ. x 4" THICK CONC. PAD AROUND TOP OF VALVE BOX.

Dead End Flushing Hydrant

6/04

N.T.S. Source: City of Richmond DPU M-12

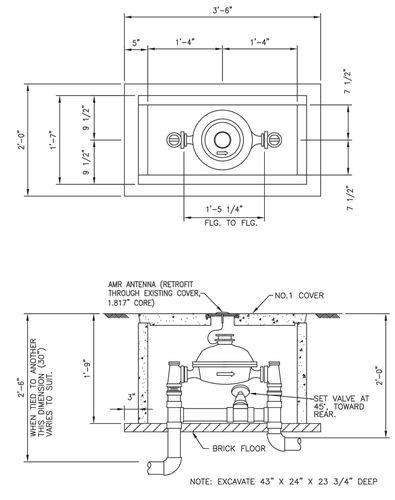

NOTE: EXCAVATE 43" X 24" X 23 3/4" DEEP

2" Disc Meter Sizing

6/04

N.T.S. Source: City of Richmond DPU M-22

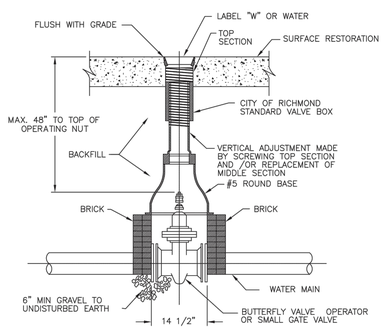

NOTES:

1. PROVIDE EXTENSION STEM IF TOP OF VALVE OPERATING NUT IS GREATER THAN 48" BELOW GROUND SURFACE
2. PROVIDE MIDDLE SECTION TO EXTEND FOR DEEP BOXES
3. ADJUST BOX TOP FOR STREET PAVEMENT OVERLAY, IF OVERLAY IS PERFORMED
4. IN GRASS AREAS PROVIDE 1'-6" SQ. x 4" THICK CONC. PAD AROUND TOP OF VALVE BOX

Small Valve Box

6/04

N.T.S. Source: City of Richmond DPU M-1

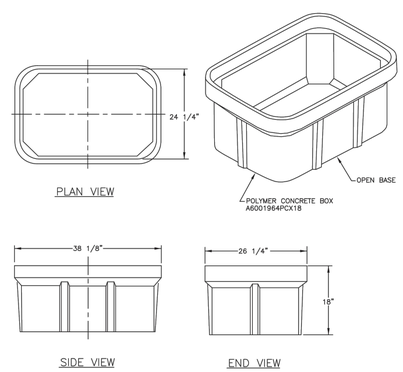

24" x 36" x 18" Polymer Concrete Water Meter Box

8/04

N.T.S. Source: City of Richmond DPU M-947

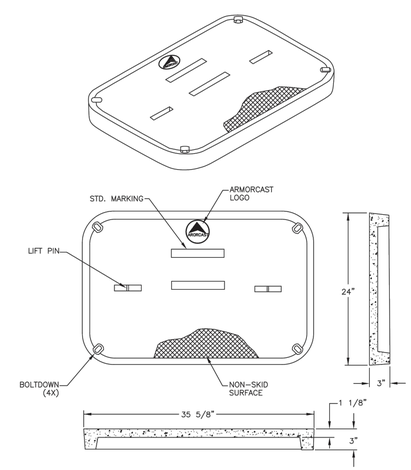

24" x 36" x 18" Polymer Concrete Water Meter Box Cover

8/04

N.T.S. Source: City of Richmond DPU M-947-B

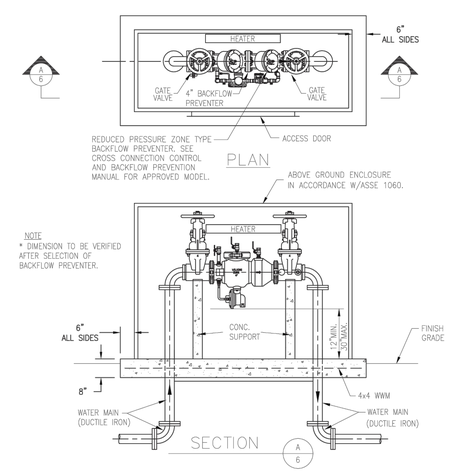

Enclosure Detail

4/06

N.T.S. Source: City of Richmond DPU ENCL

vhb.com
115 South 15th Street
Suite 200
Richmond, VA 23219
804.343.7100

Intermediate Terminal Phase 2 - Public Access

3101 Wharf Street
Richmond, Virginia

No.	Revision	Date	Appvd.

Designed by | Checked by

Issued for: Permitting

Date: June 22, 2018

Drawing Title: Details

Drawing Number: C6.04

Sheet of

Project Number: 33965.20

COMMONWEALTH OF VIRGINIA
JOHN P. CARTY
Lic. No. 039452
6/22/18
PROFESSIONAL ENGINEER

Saved Friday, June 22, 2018 4:47:02 PM CVAUGHAN Plotted Friday, June 22, 2018 4:53:33 PM Vaughan, Charlie

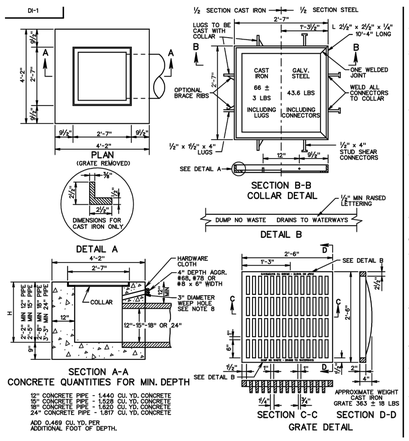

NOTES

1. DEPTH OF INLET (H) TO BE SHOWN ON PLANS FOR DEPTH GREATER THAN 10' USE STANDARD DI-1A
2. THE "H" DIMENSION SHOWN ON THE STANDARDS AND SPECIFIED ON THE PLANS WILL BE MEASURED FROM THE INVERT OF THE OUTFALL PIPE TO THE TOP OF THE STRUCTURE. PLAN "H" DIMENSIONS ARE APPROXIMATE ONLY FOR ESTIMATING PURPOSES. ACTUAL "H" DIMENSIONS SHALL BE DETERMINED BY THE CONTRACTOR FROM FIELD CONDITIONS.
3. WHEN SPECIFIED ON THE PLANS THE INVERT IS TO BE SHAPED IN ACCORDANCE WITH STANDARD SI-1. THE COST OF FURNISHING AND PLACING ALL MATERIALS INCIDENTAL TO THE SHAPING IS TO BE INCLUDED IN THE BID PRICE FOR THE STRUCTURE.
4. IN THE EVENT THE INVERT OF THE OUTFALL PIPE IS HIGHER THAN THE BOTTOM OF THE STRUCTURE, THE INVERT OF THE STRUCTURE SHALL BE SHAPED TO PREVENT THE POSSIBILITY OF STANDING OR PONDING OF WATER IN THE STRUCTURE. THE COST OF FURNISHING AND PLACING ALL MATERIALS INCIDENTAL TO INLET SHAPING IS TO BE INCLUDED IN THE BID PRICE FOR THE STRUCTURE.
5. STEPS ARE TO BE PROVIDED WHEN H IS 4'-0" OR GREATER. FOR DETAILS SEE STANDARD ST-1.
6. THIS ITEM MAY BE PRECAST OR CAST-IN-PLACE.
7. ⊕ X 8" SMOOTH DOWELS AT ⅓ POINTS OF THE WALL ARE REQUIRED IN ALL AREAS ADJACENT TO ABUTTING CONCRETE TO PREVENT SETTLEMENT. IN LIEU OF DOWELS A 2"x4" NOTCH MAY BE PROVIDED. SEE STANDARD T-2A-3, 4 FOR ALTERNATE DESIGN.
8. 3" DIAMETER WEEP HOLE WITH 12"X12" PLASTIC HARDWARE CLOTH ½" MESH OR GALVANIZED STEEL WIRE MINIMUM 12"X12" HARDWARE CLOTH ½" MESH HARDWARE CLOTH ANCHORED FIRMLY TO THE OUTSIDE OF THE STRUCTURE.
9. CAST IN PLACE CONCRETE IS TO BE CLASS A3 (3000 PSI). PRECAST CONCRETE IS TO BE 4000 PSI.
10. ANY ALTERNATE METHODS OF ANCHORAGE MEETING THE APPROVAL OF THE ENGINEER MAY BE SUBSTITUTED FOR THE CAST IRON LUGS AS SHOWN HEREON.
11. DUMP NO WASTE DRAINS TO WATERWAY LETTERING IS REQUIRED ON ALL DI-1 GRATES. LOCATION OF LETTERING MAY VARY BY MANUFACTURER.

Standard Drop Inlet

7/16

N.T.S. Source: VDOT 104.01

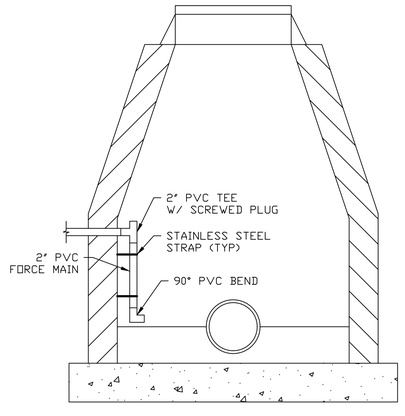

Interior Drop Manhole Connection

N.T.S. Source: VHB

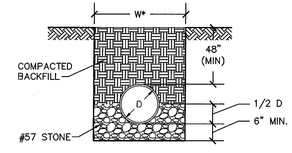

COMPACTED GRANULAR BEDDING CLASS B

NOTES:

1. * FOR "W" SEE DETAILS P-1A AND P-1B.
2. USE CLASS B COMPACTED GRANULAR BEDDING UNLESS OTHERWISE DIRECTED BY DPU TECHNICAL SERVICES DIVISION.
3. TRENCH, BACKFILL AND STREET RESTORATION SHALL BE IN ACCORDANCE WITH CITY OF RICHMOND DEPARTMENT OF PUBLIC WORKS AND/OR VDOT REQUIREMENTS.
4. DI PIPE IS REQUIRED IN AREAS WITH LESS THAN 48" OF COVER.

Sewer Bedding

12/09

N.T.S. Source: City of Richmond DPU P-2

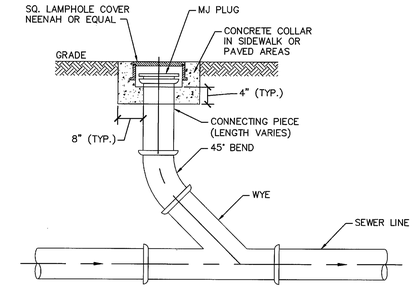

NOTES:

1. CLEANOUT COVER SHALL BE BRASS IN CONCRETE/PAVEMENT OR PLASTIC IN GRASS AREAS.
2. CLEANOUT SHALL BE 6" OR LARGER UNLESS OTHERWISE APPROVED BY DPU DEPUTY DIRECTOR OR DESIGNEE.

Cleanout Detail

12/09

N.T.S. Source: City of Richmond DPU P-7

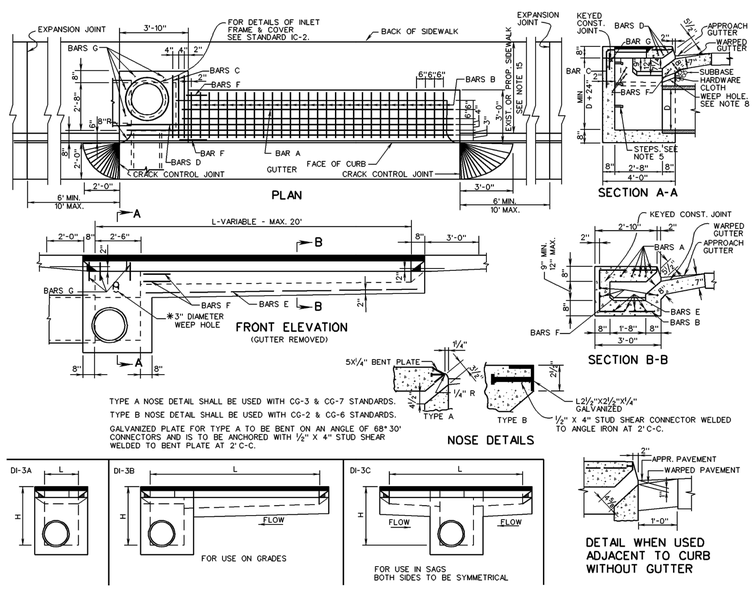

Standard Curb Drop Inlet (12"-30" Pipe - Max. Depth=8') (DI-3)

08/10

N.T.S. Source: VDOT 104.09

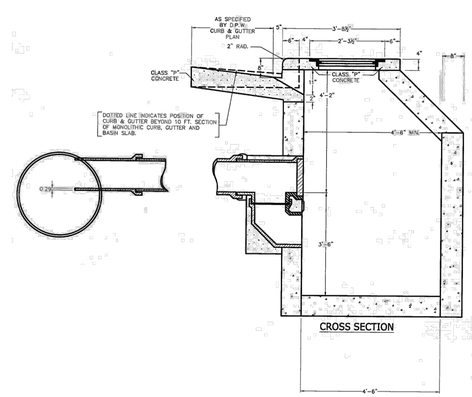

Trap Inlet

02/09

N.T.S. Source: City of Richmond DPU H-2

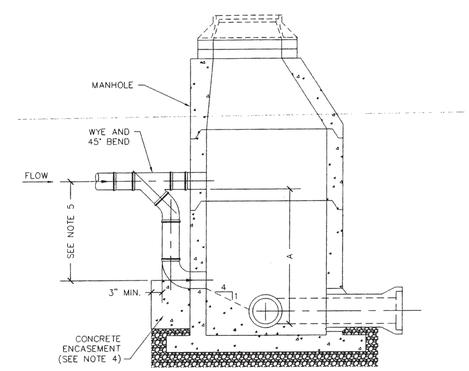

NOTES:

1. WHERE "A" IS GREATER THAN 2'-0" USE STANDARD EXTERIOR DROP MANHOLE
2. WHERE "A" DISTANCE IS LESS THAN 2'-0" THE INCOMING SEWER SHALL BE LOWERED SO THAT THE TOP OF THE INCOMING SEWER IS NOT MORE THAN 6" ABOVE TOP OF THE OUTGOING SEWER, UNLESS APPROVED BY DPU TECHNICAL SERVICES DIVISION. ELIMINATE WYE AND 45 DEGREE BEND.
3. PIPE MATERIAL SHALL BE PVC OR DI AND SHALL MATCH THAT OF INCOMING SEWER.
4. FOR PVC PIPE, PROVIDE CONCRETE ENCASEMENT AS SHOWN. FOR DI PIPE, PROVIDE RESTRAINED JOINT.
5. PROVIDE STAINLESS STEEL STRAPS EVERY 3'-0" FOR DROPS GREATER THAN 6'-0".

Exterior Drop Manhole Connection

12/09

N.T.S. Source: City of Richmond DPU M-3

vhb.com
115 South 15th Street
Suite 200
Richmond, VA 23219
804.343.7100

Intermediate Terminal Phase 2 - Public Access

3101 Wharf Street
Richmond, Virginia

No.	Revision	Date	Appvd.

Designed by — Checked by

Issued for: Permitting — Date: June 22, 2018

Drawing Title: Details

Drawing Number: C6.05

Sheet — of

Project Number: 33965.20

COMMONWEALTH OF VIRGINIA
JOHN P. CARTY
Lic. No. 039452
6/22/18
PROFESSIONAL ENGINEER

Saved Friday, June 22, 2018 4:47:02 PM CVAUGHAN Plotted Friday, June 22, 2018 4:53:43 PM Vaughan, Charlie

\\vhb\proj\Richmond\33965.20 intermed. term. phase ii\cad\d\Planset\33965.20-CALC.dwg

STM-3 Inlet Calc

Project Description

Solve For	Efficiency	

Input Data

Discharge	1.14	ft³/s
Slope	0.04900	ft/ft
Gutter Width	2.00	ft
Gutter Cross Slope	0.08	ft/ft
Road Cross Slope	0.02	ft/ft
Roughness Coefficient	0.013	
Curb Opening Length	8.00	ft
Local Depression	2.00	in
Local Depression Width	2.00	ft

Results

Efficiency	93.72	%
Intercepted Flow	1.07	ft³/s
Bypass Flow	0.07	ft³/s
Spread	2.47	ft
Depth	0.18	ft
Flow Area	0.19	ft²
Gutter Depression	0.12	ft
Total Depression	0.29	ft
Velocity	5.95	ft/s
Equivalent Cross Slope	0.16632	ft/ft
Length Factor	0.79	
Total Interception Length	10.19	ft

PROJECT: Intermediate Terminal
PROJECT NO: 33965.20
CREATED BY: RCR
DATE: February 1, 2018

10 YEAR RETURN FREQUENCY

HYDRAULIC GRADE LINE CALCULATIONS

INLET STATION	OUTLET WATER SURFACE ELEV.	Do	Qo	Lo	Sfo	Hf	Vo	Ho	Qi	Vi	Q/Vi	JUNCTION LOSS V²/2/g	Hi	ANGLE	H*	Ht	1.3Ht	0.5Ht	FINAL H	INLET WATER SURFACE ELEV.	RIM ELEV.
2	9.82	15"	1.49	76.10	0.05	0.04	9.19	0.33	1.49	5.45	8.11	0.46	0.16	90	0.32	0.81	0.00	0.00	0.85	10.67	20.00
3	16.73	15"	1.49	6.50	0.05	0.00	5.45	0.12	0.00	0.00	0.00	0.00	0.00	90	0.00	0.12	0.00	0.00	0.12	16.85	19.53

STORM SEWER DESIGN

10 YEAR FREQUENCY

Project: Intermediate Terminal
Job#: 33965.2
Date: February 1, 2018
By: RCR

FROM POINT	TO POINT	DA (ACRES)	C	CA INCR.	CA ACCUM	TC (MINUTES)	RAINFALL (IN/HR)	RUN-OFF (CFS)	LINE	INVERT UPPER	INVERT LOWER	LENGTH (FEET)	SLOPE	DIAM. (INCHES)	CAPACITY (CFS)	VELOCITY (F.P.S.)	FLOW TIME (MINUTES)
3	2	0.23	0.90	**0.21**	0.21	5.00	7.07	1.49	3	15.86	15.73	6.50	2.00%	15	9.13	5.45	0.02
2	EX-1	0.00	0.90	**0.00**	0.21	5.02	7.07	1.49	2	15.63	8.82	76.10	8.95%	15	19.31	9.19	0.14

Storm Sewer Calcs

C.B.N.L.T.
"Tomorrow's Natural Resources Today"
Chesapeake Bay Nutrient Land Trust, LLC.

February 2, 2018

VHB
ATTN: Becca Ruiz, PE
115 South 15th Street, Suite 200
Richmond, VA 23219

RE: CBNLT/Cranston's Mill Pond – Nutrient Credit Availability
Chesapeake Bay Nutrient Land Trust, LLC

Project Reference: Intermediate Terminal, City of Richmond

Attention Ms. Ruiz:

This letter is to confirm the availability of authorized Nutrient Credits sufficient to meet your project requirements at our Cranston's Mill Pond facility, which is registered with the Virginia Department of Environmental Quality (DEQ) and the Virginia Department of Conservation and Recreation (DCR). These Nutrient Credits are generated and managed under the terms of the Cranston's Mill Pond Nutrient Reduction Implementation Plan dated April 20, 2010 which was authorized by the Virginia Department of Environmental Quality (DEQ) and the Virginia Department of Conservation and Recreation (DCR) on July 13, 2010.

The Cranston's Mill Pond project has been authorized to provide Nutrient Credits for use in the James River watershed. These Credits are transferable to those entities regulated under DEQ's Stormwater Management Program in accordance with VA Code § 62.1-44.15:35. Currently our Cranston's Mill Pond facility has **329.91** pounds of Phosphorus Credits available and will be able to meet your project's phosphorus requirement of up to **0.20** pounds.

If we can provide further assistance please feel free to contact our office.

Sincerely,

Chesapeake Bay Nutrient Land Trust, LLC

By Its Manager
EarthSource Solutions, Inc.

Scott A. Reed

Scott A. Reed
Vice President

Chesapeake Bay Nutrient Land Trust, LLC. • 5735 S. Laburnum Avenue • Richmond, VA 23231 • P: 804.222.5114 • www.cbnlt.com

Chesapeake Bay Nutrient Offset Letter

Virginia Runoff Reduction Method Worksheet

DEQ Virginia Runoff Reduction Method Re-Development Compliance Spreadsheet - Version 3.0

BMP Design Specifications List: **2011 Stds & Specs**

Site Summary

Total Rainfall (in):	43
Total Disturbed Acreage:	0.62

Site Land Cover Summary

Pre-ReDevelopment Land Cover (acres)

	A soils	B Soils	C Soils	D Soils	Totals	% of Total
Forest/Open (acres)	0.00	0.00	0.00	0.00	0.00	0
Managed Turf (acres)	0.00	0.00	0.00	0.96	0.96	47
Impervious Cover (acres)	0.00	0.00	0.00	1.09	1.09	53
					2.05	100

Post-ReDevelopment Land Cover (acres)

	A soils	B Soils	C Soils	D Soils	Totals	% of Total
Forest/Open (acres)	0.00	0.00	0.00	0.00	0.00	0
Managed Turf (acres)	0.00	0.00	0.00	1.02	1.02	50
Impervious Cover (acres)	0.00	0.00	0.00	1.03	1.03	50
					2.05	100

Site Tv and Land Cover Nutrient Loads

	Final Post-Development (Post-ReDevelopment & New Impervious)	Post-ReDevelopment	Post-Development (New Impervious)	Adjusted Pre-ReDevelopment
Site Rv	0.60	0.60	--	0.62
Treatment Volume (ft³)	4,478	4,478	--	4,630
TP Load (lb/yr)	2.81	2.81	--	2.91

Pre-ReDevelopment TP Load per acre (lb/acre/yr)	Final Post-Development TP Load per acre (lb/acre/yr)	Post-ReDevelopment TP Load per acre (lb/acre/yr)
1.42	1.37	1.37

Total TP Load Reduction Required (lb/yr)	0.20	0.20	0

	Final Post-Development Load (Post-ReDevelopment & New Impervious)	Pre-ReDevelopment
TN Load (lb/yr)	20.13	20.81

Virginia Runoff Reduction Method Worksheet

Site Compliance Summary

Maximum % Reduction Required Below Pre-ReDevelopment Load	10%

Total Runoff Volume Reduction (ft³)	0
Total TP Load Reduction Achieved (lb/yr)	0.00
Total TN Load Reduction Achieved (lb/yr)	0.00
Remaining Post Development TP Load (lb/yr)	2.81
Remaining TP Load Reduction (lb/yr) Required	0.20

OFFSITE NUTRIENT CREDITS WILL BE PURCHASED TO MEET THE REQUIRED PHOSPHOROUS REMOVAL. REFER TO OFFSITE NUTRIENT CREDIT AVAILABILITY LETTER FOR MORE INFORMATION.

Virginia Runoff Reduction Method - Summary

vhb.com
vhb
115 South 15th Street
Suite 200
Richmond, VA 23219
804.343.7100

Chesapeake Bay

TOTAL GROSS SQUARE FOOTAGE AREA	89,069 GSF	2.04 AC
TOTAL LAND AREA COVERED BY BUILDINGS	0 SF	
AMOUNT OF OPEN SPACE*	1.02 AC	49.88%
AMOUNT OF IMPERVIOUS AREA ON SITE	1.03 AC	50.37%
NUMBER OF PARKING SPACES	0 Spaces	
NUMBER OF RESIDENTIAL UNITS	NOT APPLICABLE	
* OPEN SPACE INTERPRETED AS ANY PERVIOUS AREAS.		

Stormwater Management Summary

THIS DEVELOPMENT, AS A LAND DISTURBING ACTIVITY OF GREATER THAN 2,500 SF WITHIN A CHESAPEAKE BAY PRESERVATION AREA, IS SUBJECT TO THE REQUIREMENTS OF THE RICHMOND STORMWATER MANAGEMENT PERMIT (RSMP). THIS WILL PROVIDE COMPLIANCE WITH THE VIRGINIA STORMWATER MANAGEMENT PROGRAM, AS REQUIRED BY THE DEPARTMENT OF ENVIRONMENTAL QUALITY.

NO STORMWATER MANAGEMENT FACILITIES WILL BE PROVIDED WITH THIS DEVELOPMENT. COMPLIANCE WITH WATER QUALITY AND WATER QUANTITY TREATMENT REQUIREMENTS FOR RUNOFF IS DESCRIBED BELOW.

Existing Conditions:

THE SITE CURRENTLY CONSISTS OF AN ASPHALT ROADWAY; ASPHALT BIKE TRAIL WITH MINIMAL LANDSCAPING; THE COBBLESTONE TERMINAL DOCK; AND A TURF AREA WITH 3:1 SLOPES. TOPOGRAPHY IN THE DOCK AND TRAIL IS FLAT, WITH SLOPES OF 1%, WHILE THE ROAD TOPOGRAPHY IS STEEP UP THE HILL WITH SLOPES OF APPROXIMATELY 6%.

ALL SLOPES DRAIN TO THE CENTER OF THE SITE, WHERE A SERIES OF DROP INLETS PICK UP THE RUNOFF. IT IS ASSUMED THAT ALL DRAINAGE INTO THESE INLETS IS PART OF THE CITY OF RICHMOND COMBINED SEWER SYSTEM, WHICH ULTIMATELY OUTFALLS TO THE WATER TREATMENT FACILITY.

Water Quality Compliance:

EVEN THOUGH THIS PROJECT DRAINS TO THE CITY OF RICHMOND COMBINED SEWER SYSTEM, WHICH IS TREATED AT THE WATER TREATMENT FACILITY, IT IS ALSO LOCATED WITHIN A CHESAPEAKE BAY PRESERVATION AREA. A SMALL PORTION OF IMPROVEMENTS ARE WITHIN THE RESOURCE PROTECTION AREA (RPA), WHILE THE MAJORITY OF THE SITE IS WITHIN THE RESOURCE MANAGEMENT AREA (RMA). AS SUCH, WATER QUALITY TREATMENT WILL BE REQUIRED.

GIVEN THE SITE CONSTRAINTS, INCLUDING STEEP SLOPES, AND LIMITED AREA FOR DEVELOPMENT AROUND THE BIKE TRAIL AND TERMINAL DOCK, NO STORMWATER MANAGEMENT FACILITIES ARE FEASIBLE ON SITE. INSTEAD, OFFSITE NUTRIENT CREDITS WILL BE PURCHASED TO MEET THE WATER QUALITY TREATMENT REQUIREMENTS. REFER TO THE VIRGINIA RUNOFF REDUCTION METHOD SUMMARY AND LETTER OF CREDIT FOR MORE INFORMATION.

Water Quantity Compliance:

THIS PROJECT OUTFALLS TO THE CITY OF RICHMOND COMBINED SEWER SYSTEM. IT IS REQUIRED THAT NO INCREASE IN FLOW MAY DRAIN TO THE CSO. ALSO, THE DEPARTMENT OF ENVIRONMENTAL QUALITY REQUIRES COMPLIANCE WITH MINIMUM STANDARD 19 (MS-19), WHICH STATES THAT THE POST-DEVELOPMENT PEAK RUNOFF RATE FOR THE 10-YEAR STORM EVENT NOT EXCEED THE PRE-DEVELOPMENT RATE.

COMPLIANCE WITH MS-19 REQUIREMENTS IS MET ON SITE THROUGH A SLIGHT DECREASE IN THE IMPERVIOUS AREA. A SUMMARY OF THE PRE- AND POST-DEVELOPMENT PEAK RUNOFF RATES FOR EACH OUTFALL IS PROVIDED BELOW:

PRE-DEVELOPMENT:
Q = C * i * A
C = 0.65
i = 7.07 in/hr
A = 2.10 ac
Q = 9.65 CFS
POST-DEVELOPMENT:
Q = C * i * A
C = 0.63
i = 7.07 in/hr
A = 2.10 ac
Q = 9.35 CFS

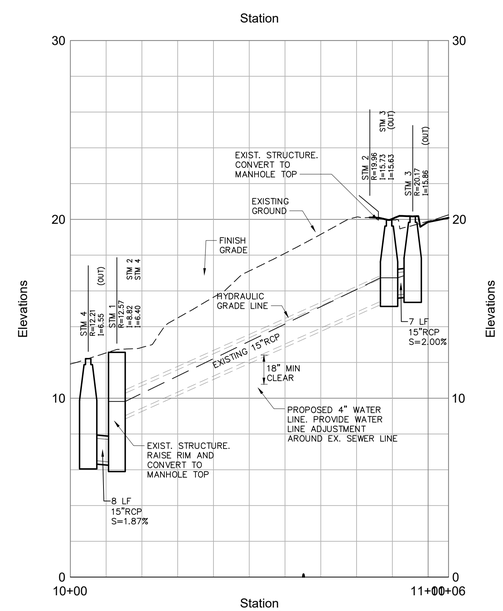

Proposed Storm Sewer Profile

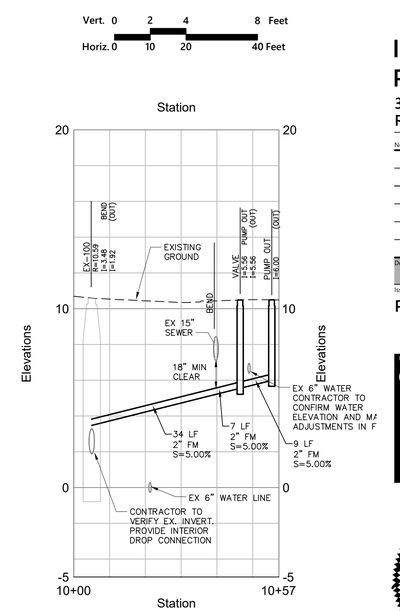

Proposed Sanitary Force Main

Intermediate Terminal Phase 2 - Public Access

3101 Wharf Street
Richmond, Virginia

No.	Revision	Date	Appvd.

Designed by
Checked by
Issued for: **Permitting**
Date: **June 22, 2018**

Drawing Title
Calculations and Profiles

Drawing Number
C7.01
Sheet of

COMMONWEALTH OF VIRGINIA
JOHN P. CARTY
Lic. No. 039452
6/22/18
PROFESSIONAL ENGINEER

Project Number
33965.20

Saved Friday, June 22, 2018 11:55:51 AM CVAUGHAN Plotted Friday, June 22, 2018 4:54:17 PM Vaughan, Charlie

\\vhb\proj\Richmond\33965.20 intermed. term. phase ii\cad\d\Planset\33965.20-DA.dwg

Pre-Development Drainage Areas

Drainage Area	Soil Group	Ultimate Outfall	Impervious (SF) 0.90	Turf (SF) 0.35	Forest (SF) 0.25	Total Area (SF)	Area (AC)	Weighted C
DA 1	D	CSO	50,029	41,213	0	91,242	2.095	0.65
Total			50,029	41,213	0	91,242	2.095	0.65

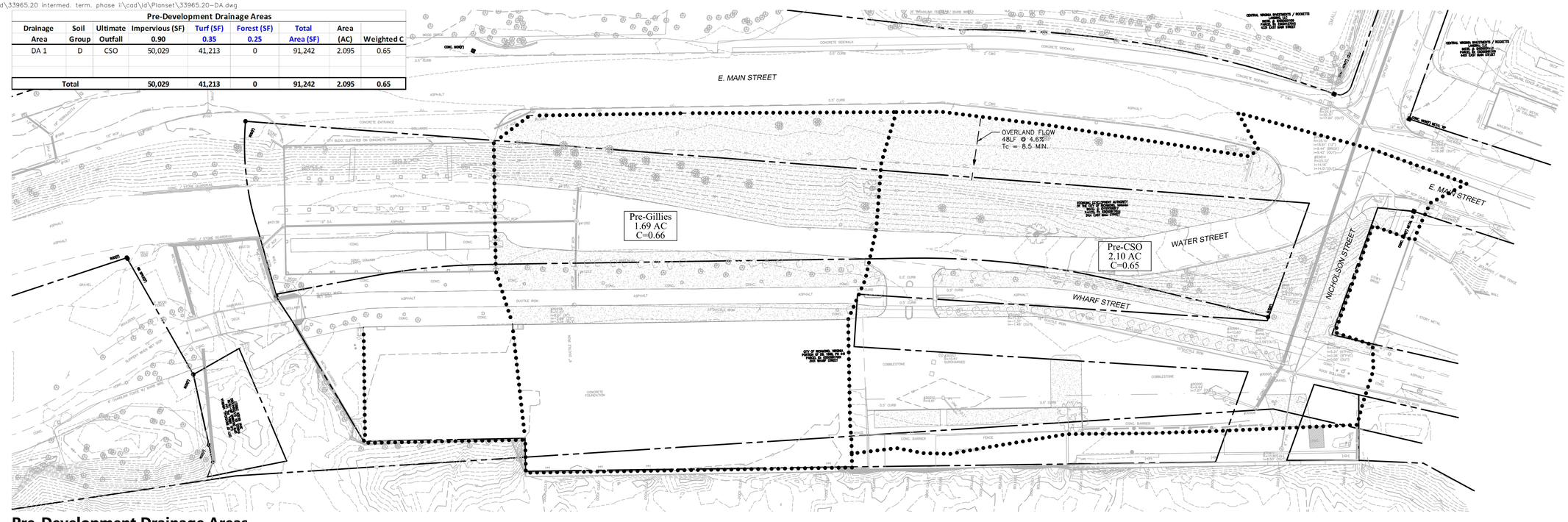

Pre-Development Drainage Areas

Scale: 1"=40'

Post-Development Drainage Areas

Drainage Area	Soil Group	Ultimate Outfall	Impervious (SF) 0.90	Turf (SF) 0.35	Forest (SF) 0.25	Total Area (SF)	Area (AC)	Weighted C
DA 1	D		46,045	45,197	0	91,242	2.095	0.63
Total			46,045	45,197	0	91,242	2.095	0.63

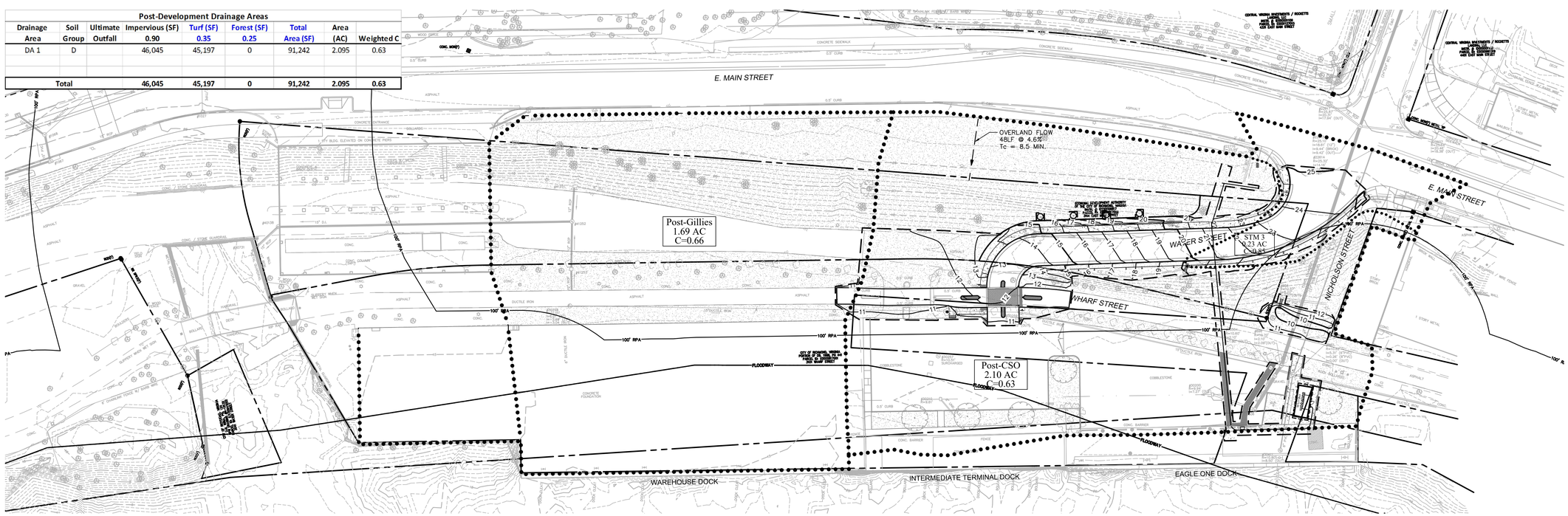

Post-Development Drainage Areas

Scale: 1"=40'

vhb.com

115 South 15th Street
Suite 200
Richmond, VA 23219
804.343.7100

Legend

- PERVIOUS AREA
- DRAINAGE DIVIDE
- TIME OF CONCENTRATION FLOW PATH
- DA 1 / A=0.00 / C=0.00 — DRAINAGE AREA ID / TOTAL AREA, ACRES / RUNOFF COEFFICIENT: C-FACTOR

0 20 40 80 Feet

Intermediate Terminal Phase 2 - Public Access

3101 Wharf Street
Richmond, Virginia

No.	Revision	Date	Appvd.

Designed by | Checked by

Issued for: Permitting

Date: June 22, 2018

Drawing Title: Drainage Area Maps

Drawing Number: C8.01

Sheet of

COMMONWEALTH OF VIRGINIA
JOHN P. CARTY
Lic. No. 039452
6/22/18
PROFESSIONAL ENGINEER

Project Number: 33965.20

Saved Tuesday, June 19, 2018 9:14:54 AM BRUIZ Plotted Friday, June 22, 2018 4:55:02 PM Vaughan, Charlie