COMMISSION OF ARCHITECTURAL REVIEW

APPLICATION FOR CERTIFICATE OF APPROPRIATENESS

RECEIVED
NOV 19 2019
BY:

Date/time rec'd: NOV 19 2019
Rec'd by:
Application #:
Hearing date: COA-065071-2019

PROPERTY (location of work)

Address 510 West 19th St Richmond 23225

Historic district Springhill

APPLICANT INFORMATION

Name John Crone

Company

Mailing Address 506 West 19th St
Richmond VA 23225

Phone (804) 814-6407

Email TrinityCrone@aim.com

Applicant Type: ☑ Owner ☐ Agent
☐ Lessee ☐ Architect ☐ Contractor
☐ Other (please specify):

OWNER INFORMATION (if different from above)

Name

Mailing Address

Company

Phone

Email

PROJECT INFORMATION

Review Type: ☑ Conceptual Review ☐ Final Review

Project Type: ☐ Alteration ☐ Demolition ☐ New Construction (Conceptual Review Required)

Project Description: (attach additional sheets if needed)
Building a two Story New Construction House

ACKNOWLEDGEMENT OF RESPONSIBILITY

Compliance: If granted, you agree to comply with all conditions of the COA. Revisions to approved work require staff review and may require a new application and CAR approval. Failure to comply with the COA may result in project delays or legal action. The COA is valid for one (1) year and may be extended for an additional year, upon written request.

Requirements: A complete application includes all applicable information requested on checklists to provide a complete and accurate description of existing and proposed conditions. Applicants proposing major new construction, including additions, should meet with Staff to review the application and requirements prior to submitting an application. Owner contact information and signature is required. Late or incomplete applications will not be considered.

Zoning Requirements: Prior to Commission review, it is the responsibility of the applicant to determine if zoning approval is required and application materials should be prepared in compliance with zoning.

Signature of Owner John B. Crone Date 11/18/19

510 W 19th St
Richmond VA 23225

Windows and Doors

Front Door- 3/0x6/8 Therma True raised panel with transom above

Back Door- 3/0x6/8 Therma True raised panel with full glass

First floor front two windows – 2/8x6/2 Jeld Wen Siteline Clad Double Hung, Aluminum

First Floor half bath window- 2/0x4/0 Jeld Wen Siteline Clad Double Hung, Aluminum

Great Room on Left Side of house- Twin 2/8x6/2 Jeld Wen Siteline Clad Double hung, Aluminum

Second Floor Master Bedroom- 2/8x5/2 Jeld Wen Siteline Clad Double Hung Aluminum

Back of House 2nd Floor -2/0x4/0 Jeld Wen Siteline Clad Double Hung Aluminum

Back of House 2nd Floor Master Bath- 3/0x1/4 Jeld Wen siteline transom Aluminum

Left Side of House second floor- 2/8x5/2 Jeld Wen Siteline Clad Double Hung Aluminum

Front Gable- 2/4x2/4 fixed Jeld Wen siteline Aluminum

All windows will be black aluminum clad

Foundation: Brick- Color Midnight Black- Size- Modular- Texture- Wire cut made by- Taylor Clay Products Inc.- Mortar- WR2062 Smoke (Color)

Siding- Hardyplank Smooth Artic White (Color)

Outside Trim- Hardyplank-Arctic White (color)

Shingles- Charcoal (Color) CertainTeed Landmark

Front Porch Roof- Metal- Black

506 W. 19th Street
Existing Dwelling

510 W. 19th Street
Proposed Dwelling

512 W. 19th Street
Existing Dwelling

MICHAEL FRANK REPSHER
ARCHITECT
PO Box 3507
Glen Allen, VA 23060-3507
804.934.3001

NO.	REVISION	DATE

DATE: 11.14.19 PROJECT NO.

510 W. 19th Street
Richmond, VA

A-1

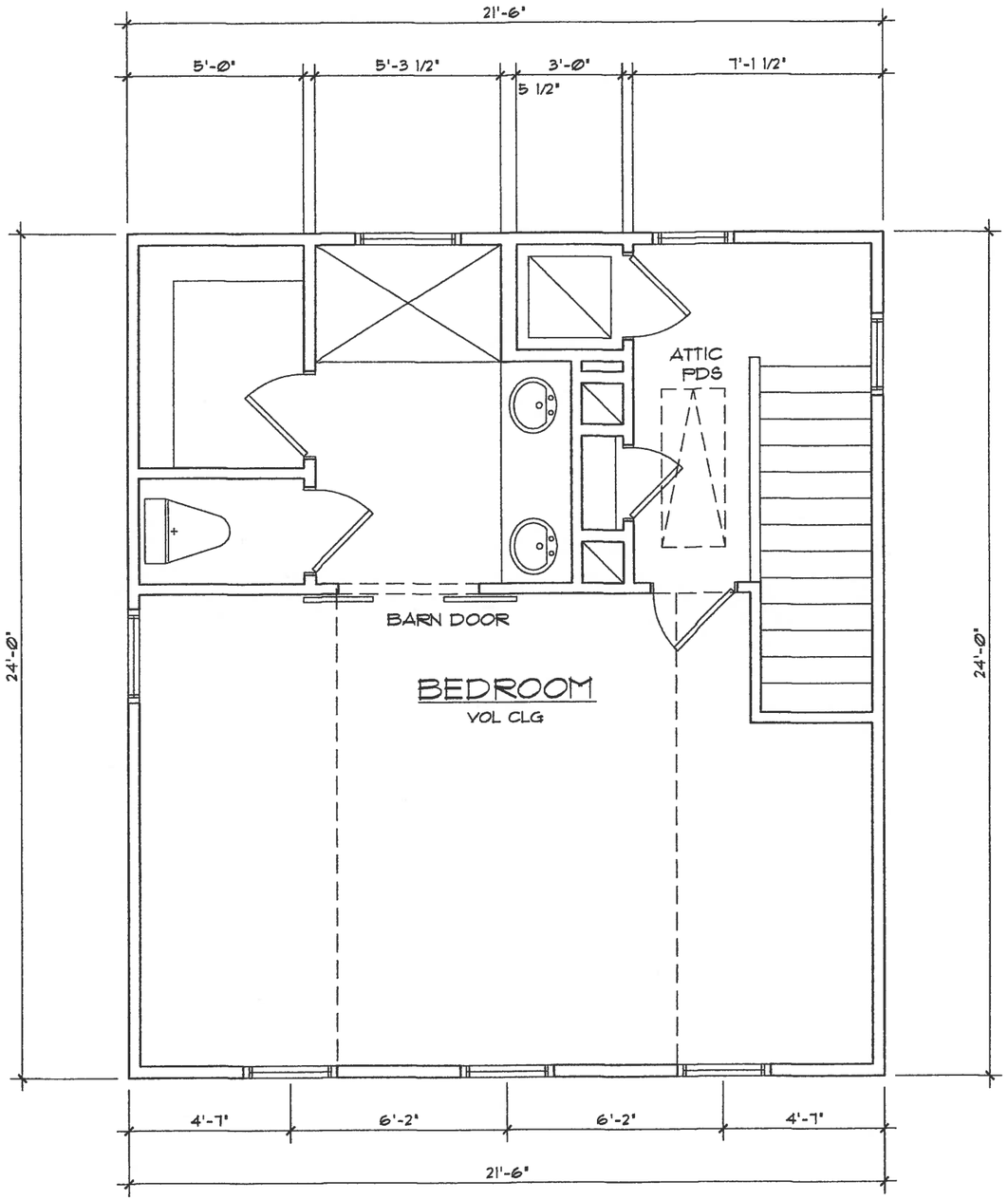

SECOND FLOOR PLAN

1/4" = 1'-0"

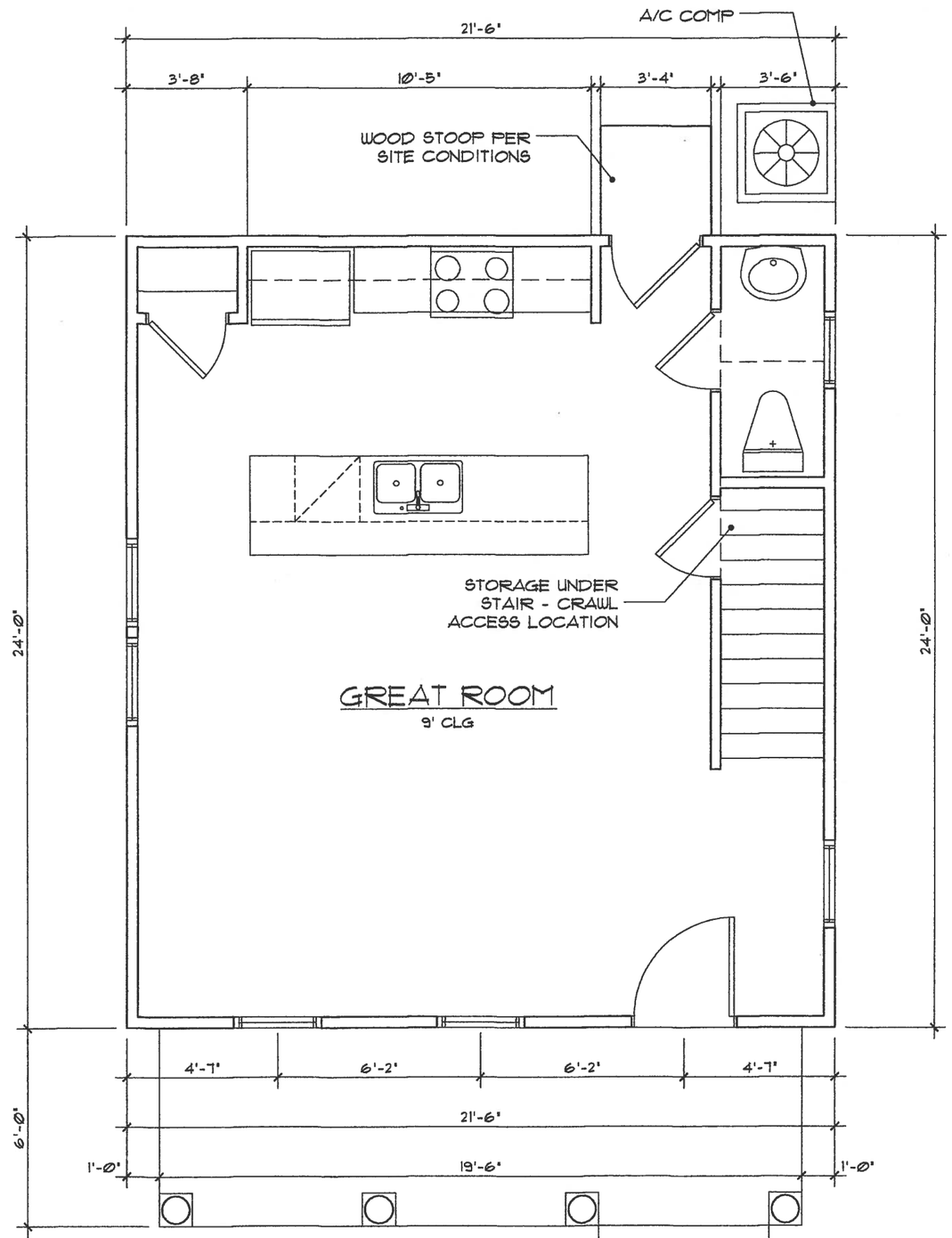

FIRST FLOOR PLAN

1/4" = 1'-0"

MICHAEL FRANK REPSHER
ARCHITECT
PO Box 3507
Glen Allen, VA 23060-3507
804.994.3001

NO.	REVISION	DATE

DATE: 11.14.19 PROJECT NO.

510 W. 19th Street
Richmond, VA

A-2

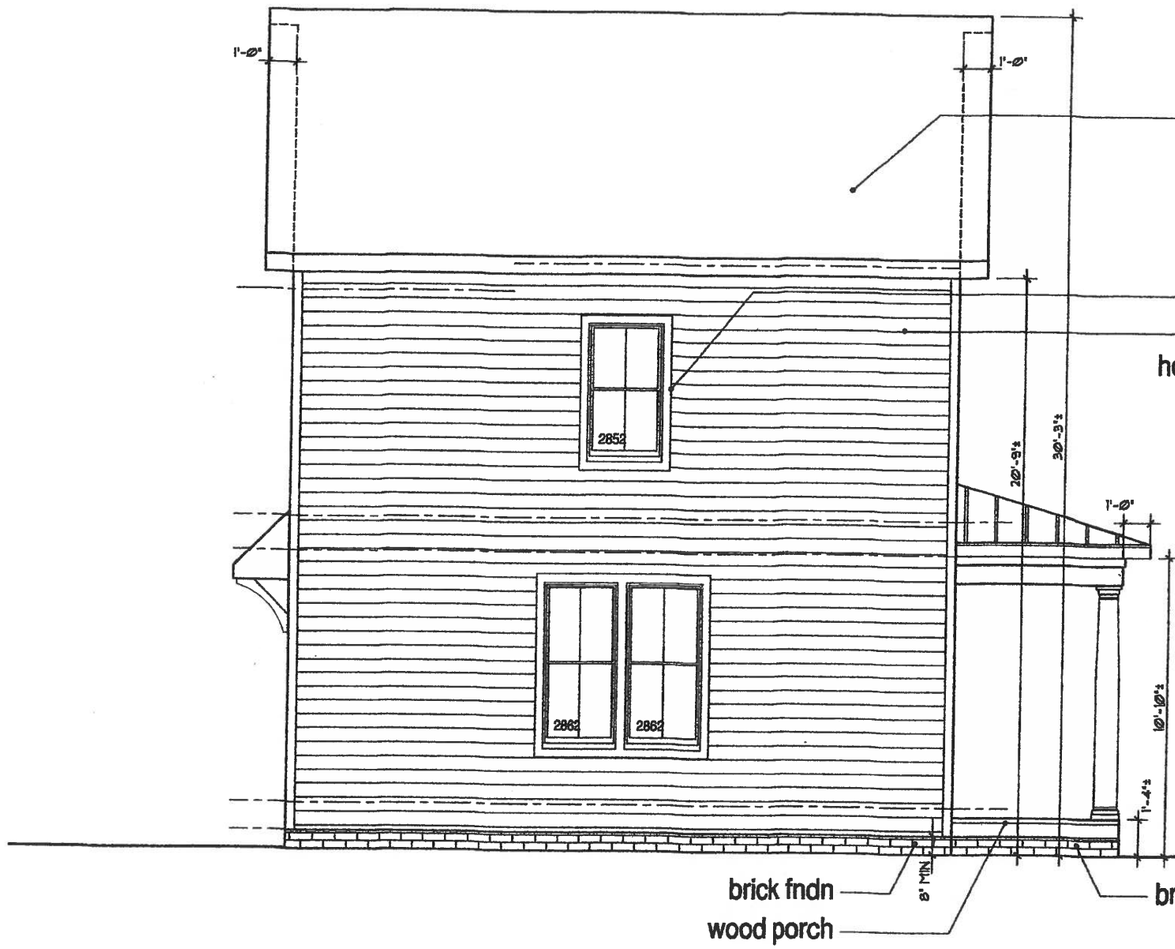

LEFT ELEVATION

3/16" = 1'-0"

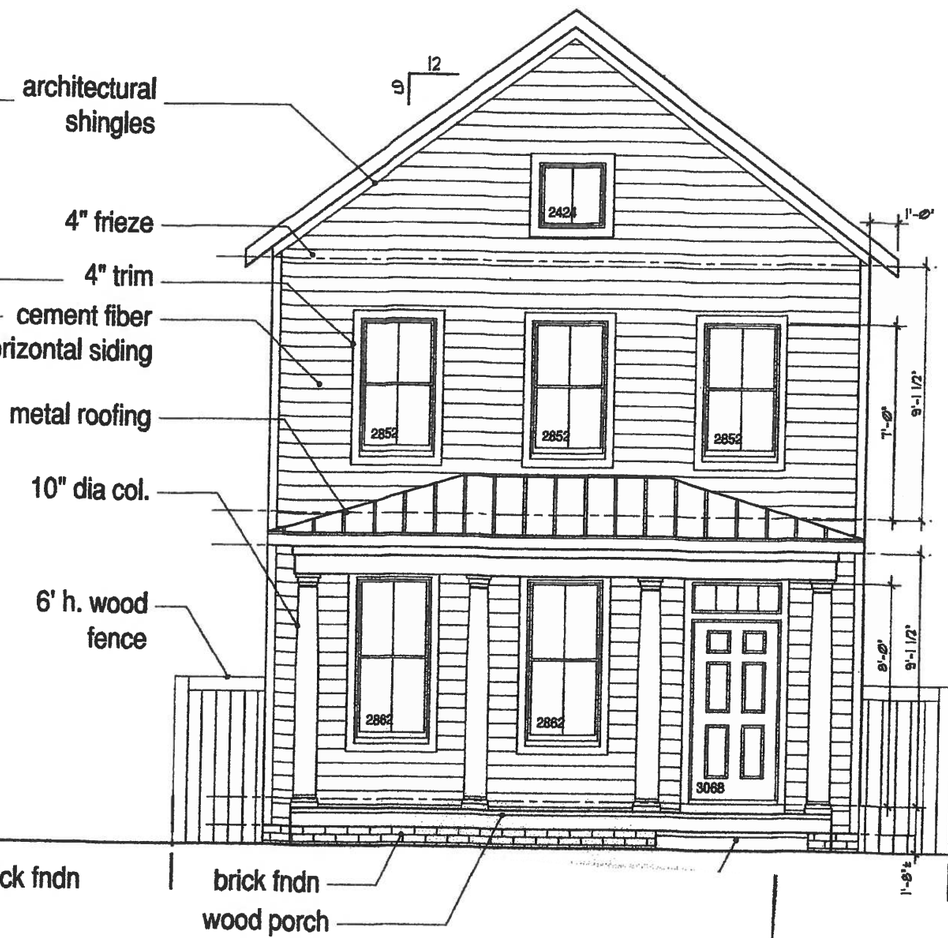

FRONT ELEVATION

3/16" = 1'-0"

MICHAEL FRANK REPSHER
ARCHITECT
PO Box 3807
Glen Allen, VA 23060-3807
804.594.3001

NO.	REVISION	DATE

DATE: 11.14.19

PROJECT NO.:

510 W. 19th Street
Richmond, VA

A-3

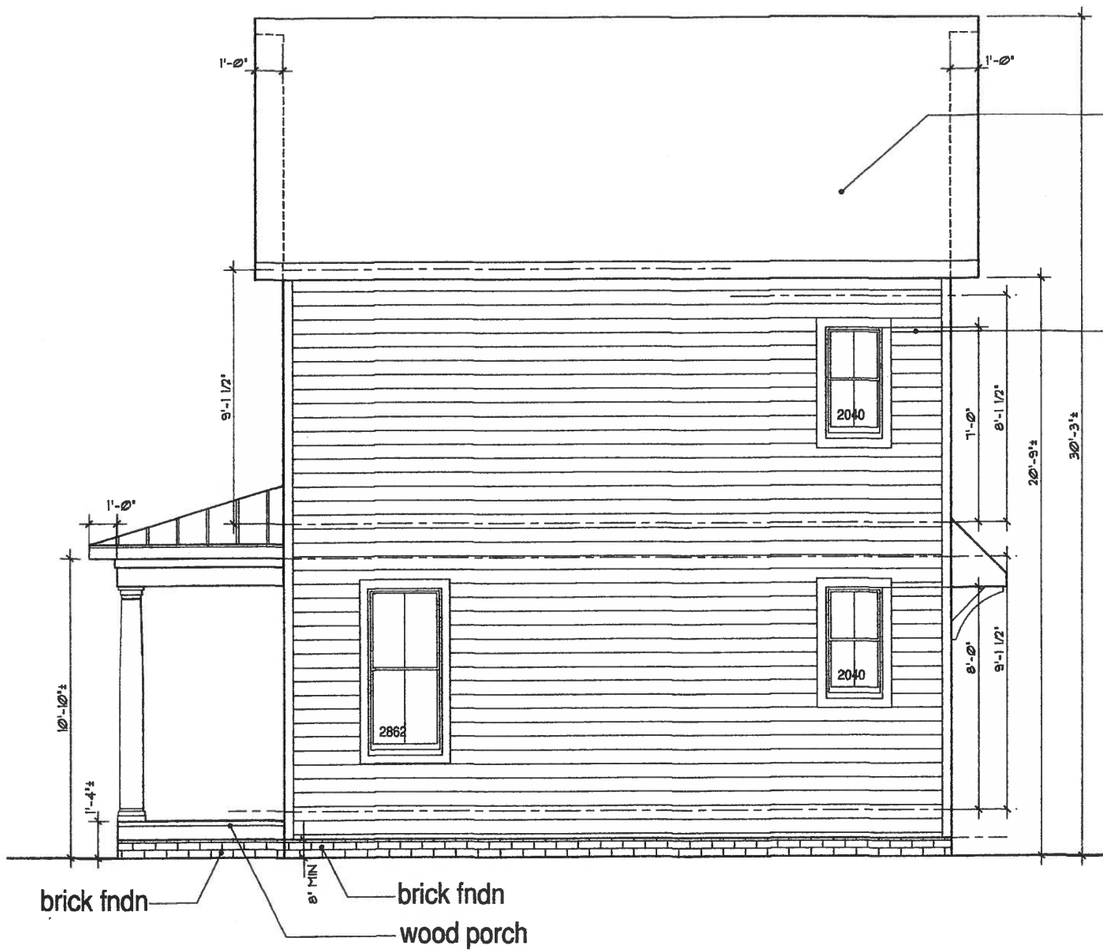

RIGHT ELEVATION

1/4" = 1'-0"

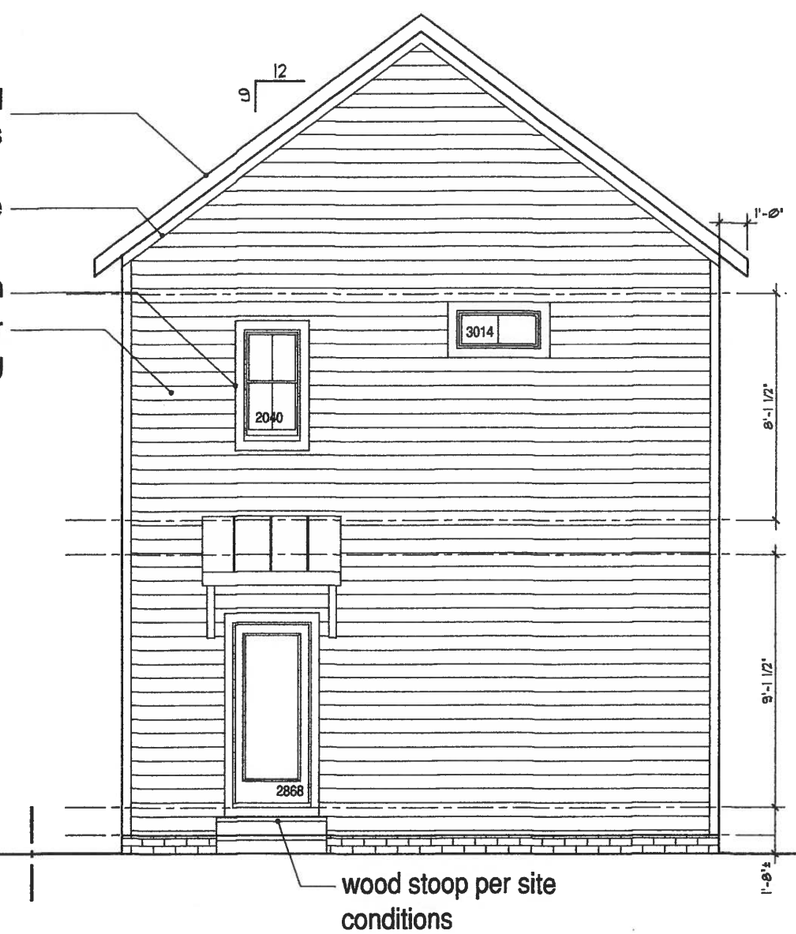

REAR ELEVATION

1/4" = 1'-0"

MICHAEL FRANK REPSHER
ARCHITECT
PO Box 3507
Glen Allen, VA 23060-3507
804.934.3001

NO.	REVISION	DATE

DATE: 11.14.19 PROJECT NO.:

510 W. 19th Street
Richmond, VA

A-4

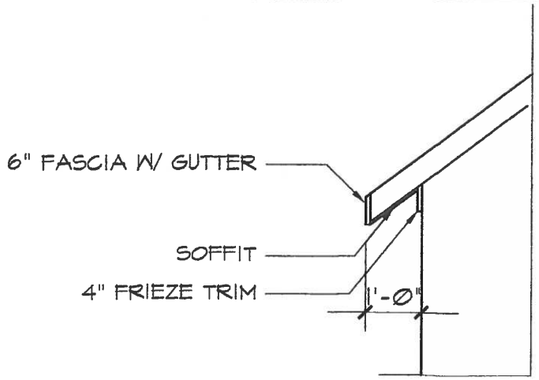

Soffit Detail

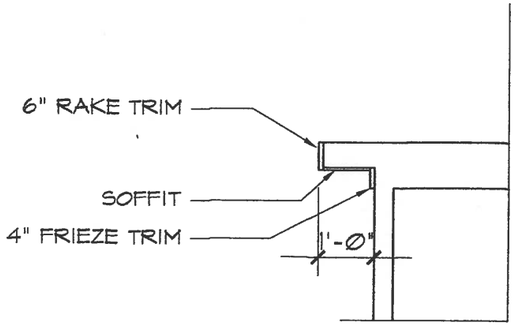

Rake Detail

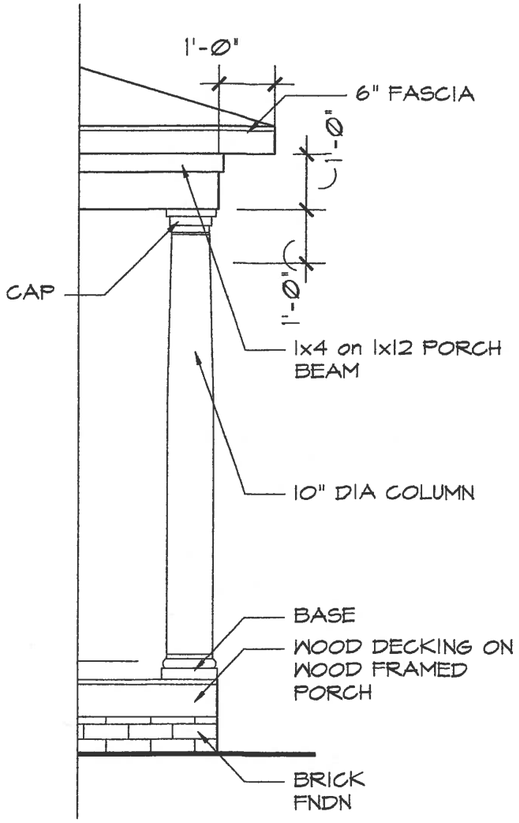

Porch Detail

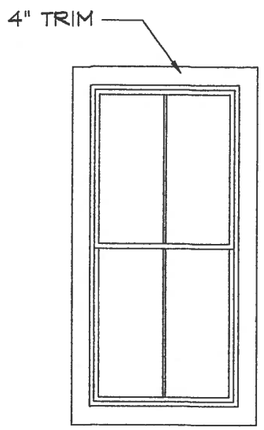

Window/Door Trim

Typical Details

3/8"=1'-0"

MICHAEL FRANK REPSHER
ARCHITECT
PO Box 3507
Glen Allen, VA 23060-3507
804.994.3001

NO.	REVISION	DATE

DATE: 11.14.19 PROJECT NO.

510 W. 19th Street
Richmond, VA

A-5

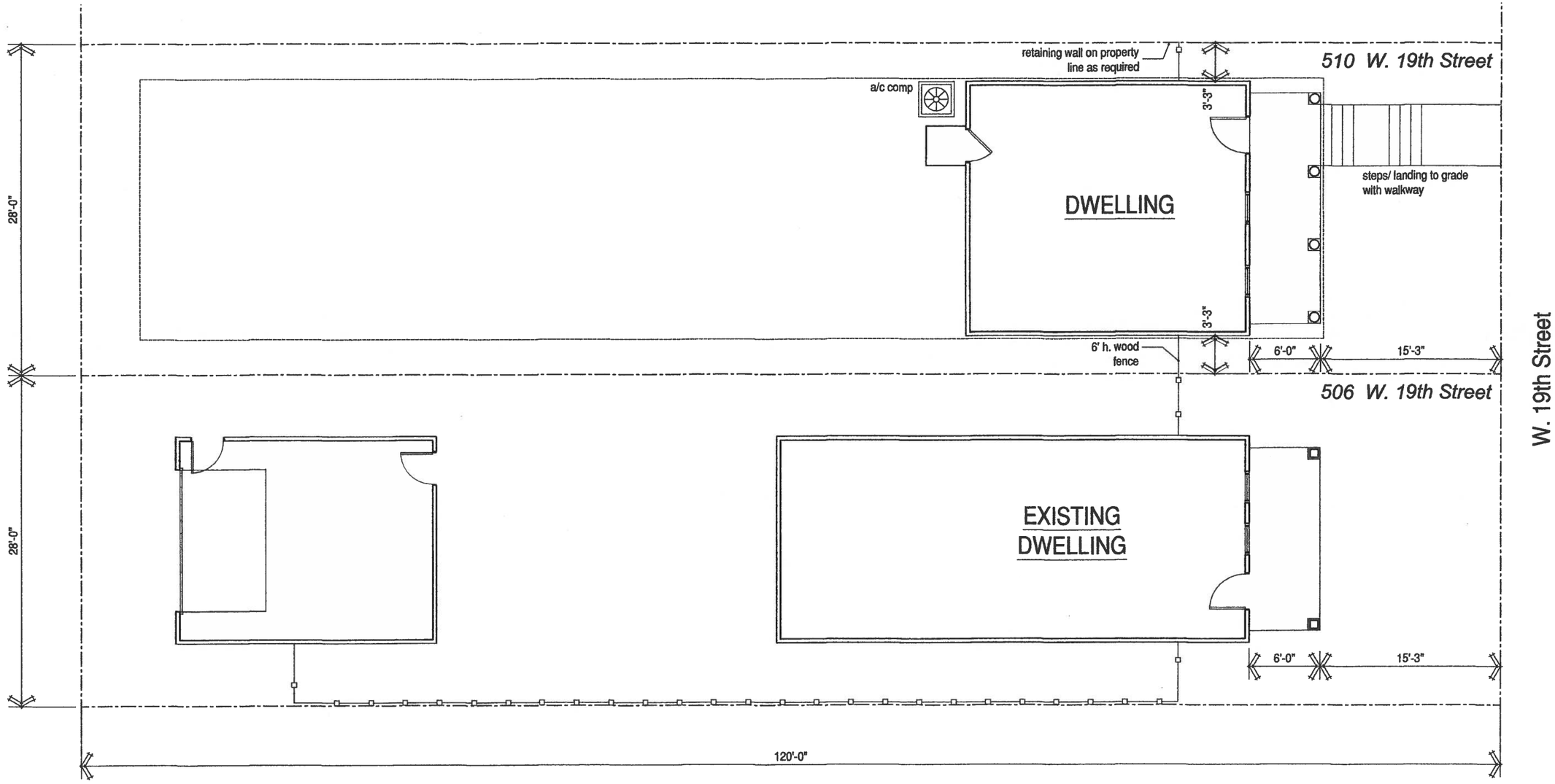

MICHAEL FRANK REPSHER
ARCHITECT
PO Box 3507
Glen Allen, VA 23060-3507
804.994.3201

NO.	REVISION	DATE

DATE: 11.14.19 | PROJECT NO.:

510 W. 19th Street
Richmond, VA

S-1