DEPARTMENT OF
PLANNING AND DEVELOPMENT REVIEW

Commission of Architectural Review
Certificate of Appropriateness Application
900 E. Broad Street, Room 510
Richmond, VA 23219
804-646-6569

Property *(location of work)*
Property Address: 3301 E. Marshall St Current Zoning: UB
Historic District: Chimborazo

Application is submitted for: *(check one)*
- ☒ **Alteration**
- ☐ **Demolition**
- ☐ **New Construction**

Project Description *(attach additional sheets if needed)*:
Restore mercantile entrance and facade. Repair damaged foundation, restore entrance door to original size and with single light wood door, replace damaged storefront glass and deteriorated mounting system with new

Applicant/Contact Person: Allan Rosenbaum
Company:
Mailing Address: 3301 E. Marshall St.
City: Richmond State: VA Zip Code: 23223
Telephone: (804) 6832564
Email: allan_rosenbaum@yahoo.com
Billing Contact? Yes Applicant Type (owner, architect, etc.): Owner

Property Owner: Allan Rosenbaum
If Business Entity, name and title of authorized signee:
Mailing Address: 3301 E. Marshall St
City: Richmond State: VA Zip Code: 23223
Telephone: (80) 6832564
Email: allan_rosenbaum@yahoo.com
Billing Contact? Yes
****Owner must sign at the bottom of this page****

Acknowledgement of Responsibility

Compliance: If granted, you agree to comply with all conditions of the certificate of appropriateness (COA). Revisions to approved work require staff review and may require a new application and approval from the Commission of Architectural Review (CAR). Failure to comply with the conditions of the COA may result in project delays or legal action. The COA is valid for one (1) year and may be extended for an additional year, upon written request and payment of associated fee.

Requirements: A complete application includes all applicable information requested on checklists available on the CAR website to provide a complete and accurate description of existing and proposed conditions, as well as payments of the application fee. Applications proposing major new construction, including additions, should meet with staff to review the application and requirements prior to submitting. Owner contact information and signature is required. Late or incomplete applications will not be considered.

Zoning Requirements: Prior to Commission review, it is the responsibility of the applicant to determine if zoning approval is required. Application materials should be prepared in compliance with zoning.

Property Owner Signature: _____ **Date:** May 2, 2025

Replace cracked and damaged foundation at entranceway and under kneewalls.
Rebuild kneewalls matching dimensions and trim details.
Replace with custom door and restore to original dimensions.
Replace window system with commercial storefront system matching existing dimensions and divisions.

The kneewall has wood rot.
Rebuild kneewall matching existing dimensions and trim detailing.
Add metal wrap for top plate.

Remove existing door and infill trim material. Replace with custom African Mahogany Full Light Door. Final dimensions determined upon demolition.

SIEWERS
LUMBER & MILLWORK
SINCE 1884

R. A. Siewers, Inc.
Lumber & Millwork
1901 Ellen Rd
Richmond VA 23230
804-358-2103
Fax: 804-359-6986

QUOTE

2504-121399

SOLD TO:	SHIP TO:
ALEX & SON CONTRACTOR, LLC 112 S PROVIDENCE ROAD SUITE 201 N CHESTERFIELD VA 23236	ALEX & SON CONTRACTOR, LLC 112 S PROVIDENCE ROAD SUITE 201 N CHESTERFIELD VA 23236 308-1390

ACCOUNT	JOB
4666O	0
CREATED ON	04/07/2025
EXPIRES ON	04/14/2025
BRANCH	1000
CUSTOMER PO#	QUOTE
STATION	STO1
CASHIER	GSW
SALESPERSON	STM
ORDER ENTRY	GSW
MODIFIED BY	

Item	Description	D	Quantity	U/M	Price	Per	Amount
BENCH	EXTERIOR DOOR: 1-3/4" X 28" X 84" QUARTERSAWN AFRICAN MAHOGANY FULL LIGHT DOOR . - 5" STILES AND TOP RAIL - 17" BOTTOM RAIL - EGG AND DART GLASSBEAD (EXTERIOR) - OVALO STICKING (INTERIOR) - 1/4" BEVELLED GLASS, 1-1/2" BEVEL, TEMPERED, NO LOGO - ASTRAGAL INCLUDED - 5-6 WEEK LEADTIME -		2	EA	[redacted]		

SIEWERS
LUMBER & MILLWORK
SINCE 1884

Scott Wallace

RICHMOND'S OLDEST LUMBERYARD
"Preserving the Past while Building the Future"

1901 Ellen Road
Richmond, Virginia 23230
scottw@siewers.com

Phone: (804) 358-2103
FAX: (804) 359-6986

SPECIAL ORDER ITEMS ARE NOT RETURNABLE. All quotes expire in 7 days unless specified otherwise. It is the responsibility of the purchaser to verify all quantities on the quote for accuracy.

VA 6.00% [redacted]

Buyer: CARLOS SALMERON

Signature

E Marshall St
3300
DO IT
RIGHT

3301

CT451

STOREFRONT

2” x 4 1/2” THERMAL CENTER GLAZED SYSTEM

B4

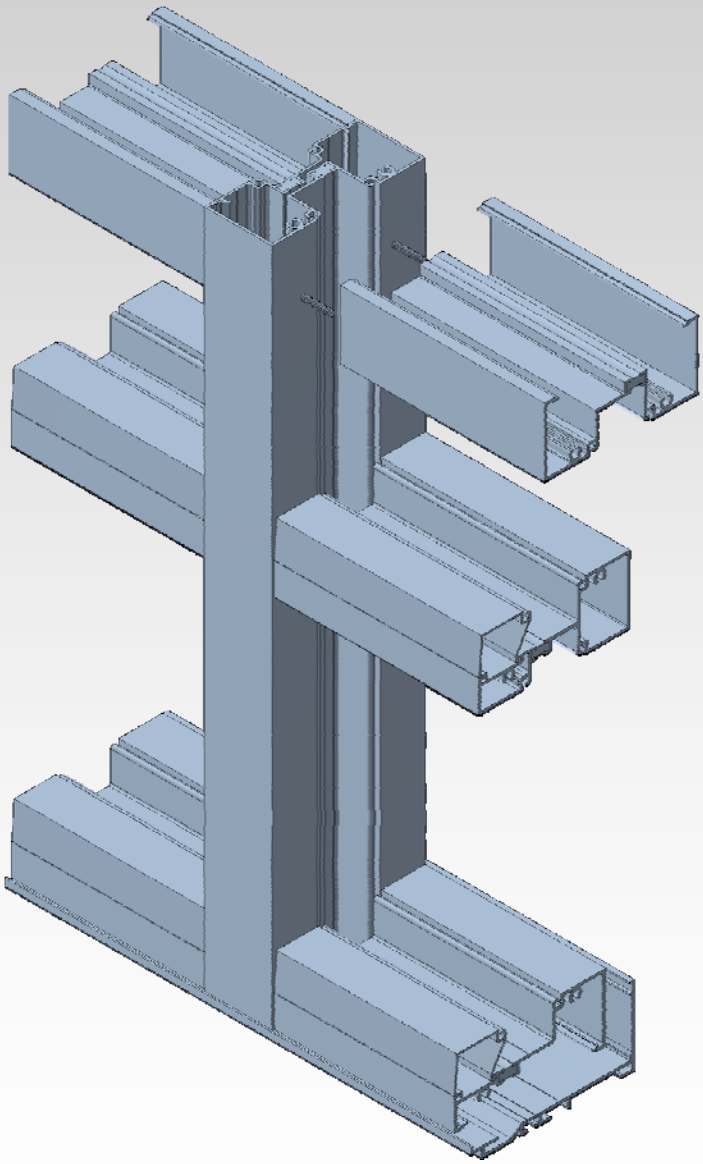

DETAILBOOK

TRULITE
GLASS & ALUMINUM SOLUTIONS™

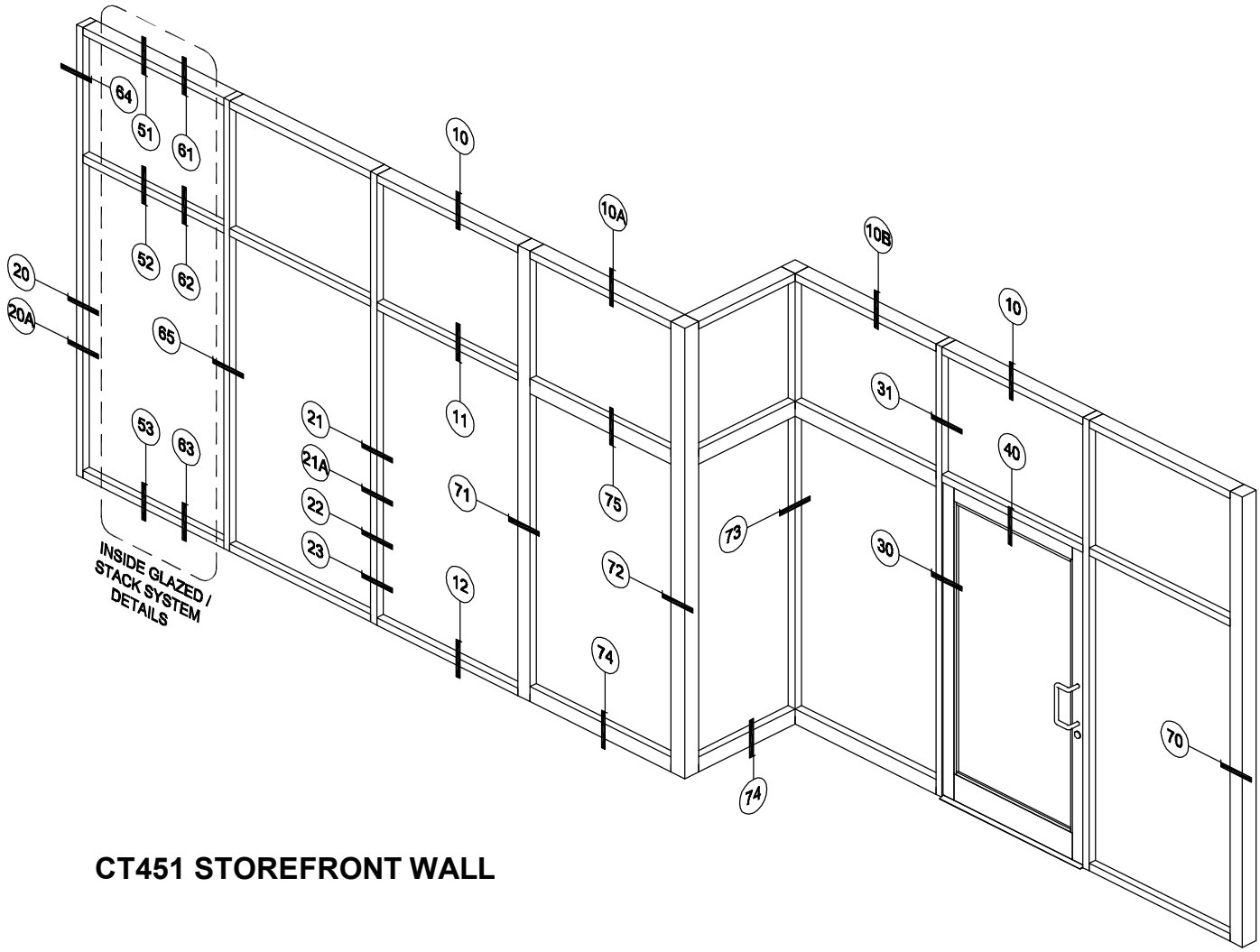

CT451 STOREFRONT WALL

CT451 SYSTEM HIGHLIGHT

- 2" x 4 1/2" FRAMING FOR 1in GLASS
- CENTER GLAZED STOREFRONT FRAMING
- SCREW SPLINE AND STACK ERECTION OPTION
- INTERIOR OR EXTERIOR GLAZING OPTION
- OPTIONAL RECEPTORS, POST AND REINFORCEMENT

TYPICAL GLASS BITE = 7/16"
GLASS SIZE FORMULA = DLO + 7/8"

TAG DESCRIPTION

10	STANDARD HEADER DETAIL
10A	ALTERNATE HEAD (DEEP POCKET)
10B	ALTERNATE HEAD (WITH RECEPTOR)
10C	ALTERNATE HEAD / SILL
11	STANDARD INTERMEDIATE HORIZONTAL
12	STANDARD SILL DETAIL
20	STANDARD JAMB DETAIL
20A	DEEP POCKET JAMB
21	STANDARD VERTICAL MULLION-OPEN BACK
21A	HEAVY MULLION
21B	MULLION WITH DEEP POCKET FILLER
21C	EXPANSION MULLION

TAG DESCRIPTION

30	DOOR JAMB DETAIL
31	DOOR TRANSOM DETAIL
40	DOOR TRANSOM DETAIL
41	DOOR TRANSOM DETAIL

INSIDE GLAZED APPLICATION

51	INSIDE GLAZED - HEAD
52	INSIDE GLAZED - INT. HORIZONTAL
52	INSIDE GLAZED - SILL

STACKED SYSTEM APPLICATION

61	STACK - HEAD
62	STACK - INT. HORIZONTAL
63	STACK - SILL
64	STACK - JAMB
65	STACK - VERTICAL MULLION
70	WIDE JAMB MULLION
71	WIDE INTERMEDIATE MULLION
71A	WIDE 3-WAY CORNER
72	WIDE OUTSIDE CORNER
73	WIDE INSIDE CORNER
74	TALL SILL
75	TALL INTERMEDIATE HORIZONTAL
80	EXPANDABLE BREAK METAL POST COVER
81	135deg CORNER MULLION
82	VARIABLE CORNER

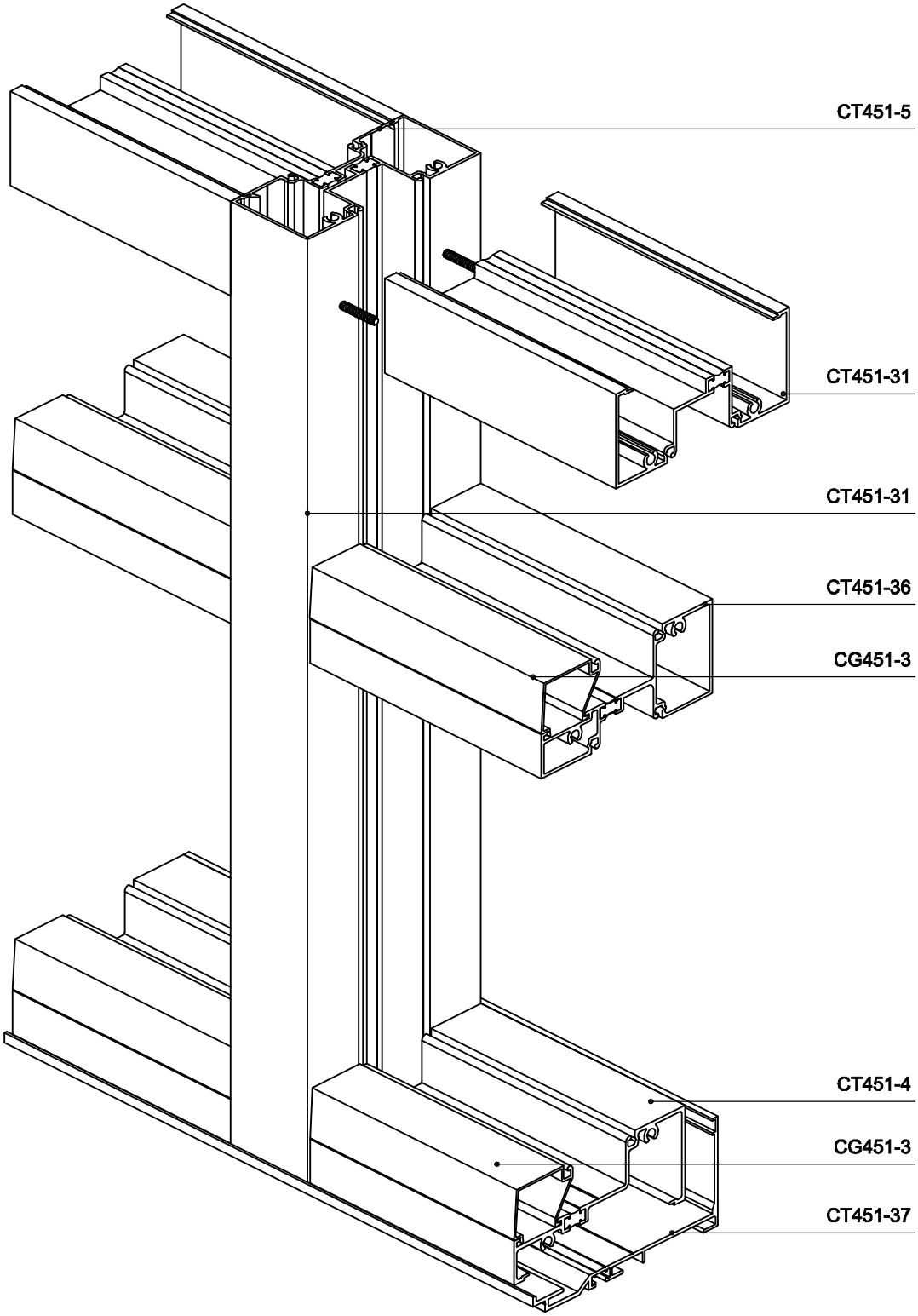

CT451 STOREFRONT SYSTEM

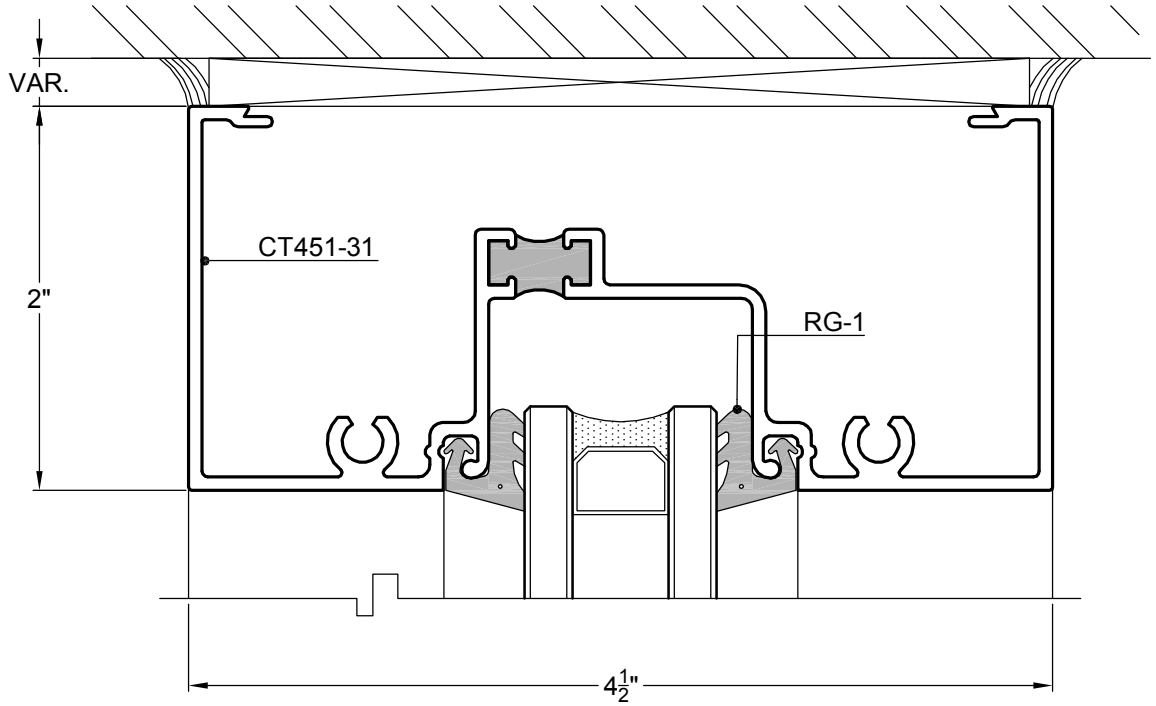

10 HEAD

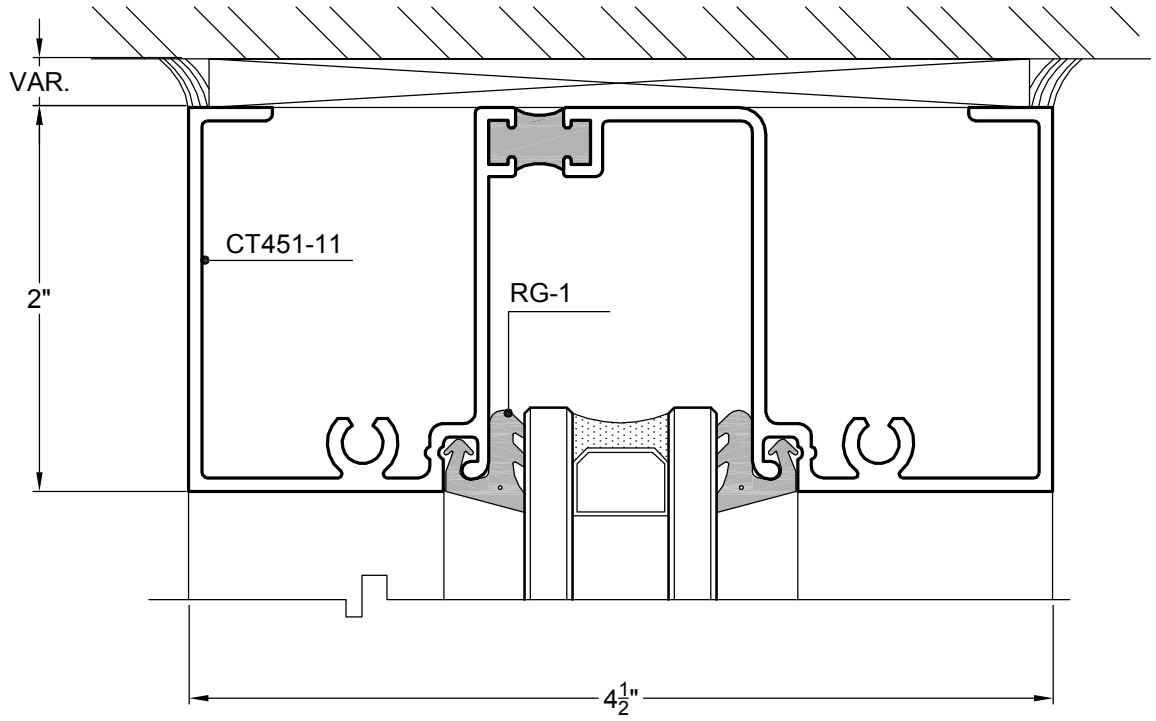

10A DEEP POCKET HEAD

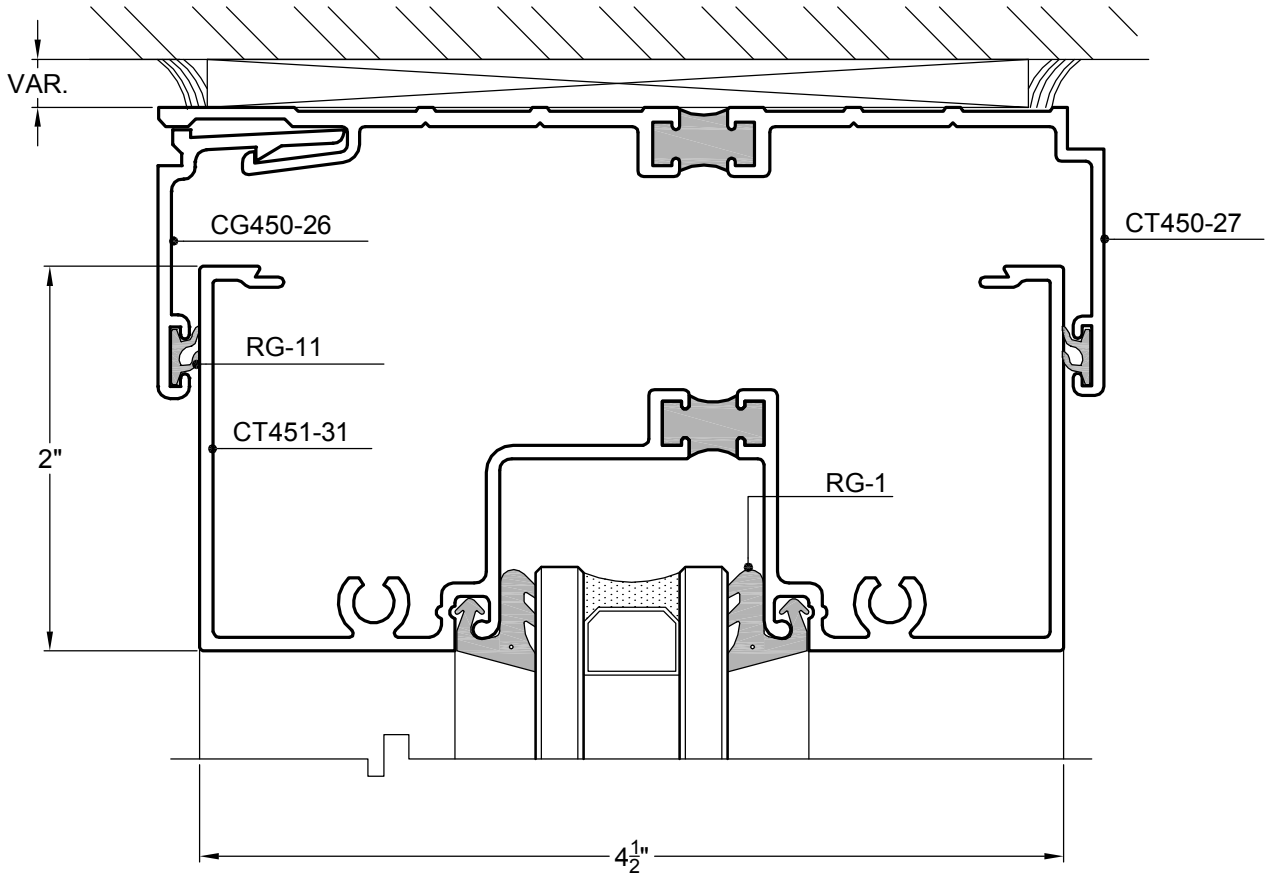

10B HEAD WITH RECEPTOR

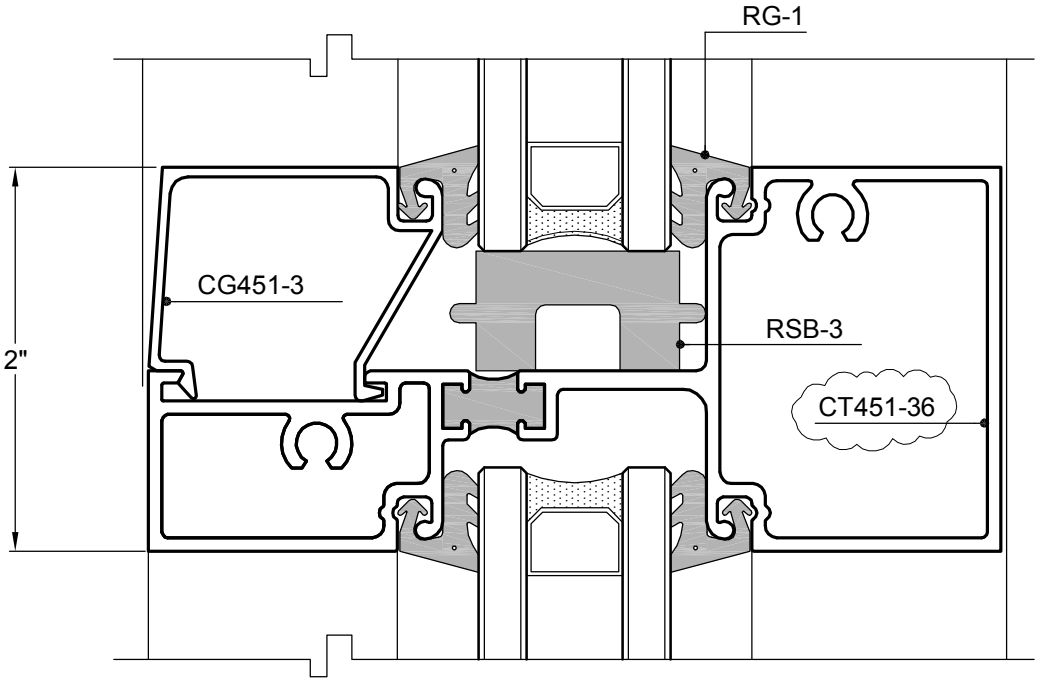

11 INTERMEDIATE HORIZONTAL

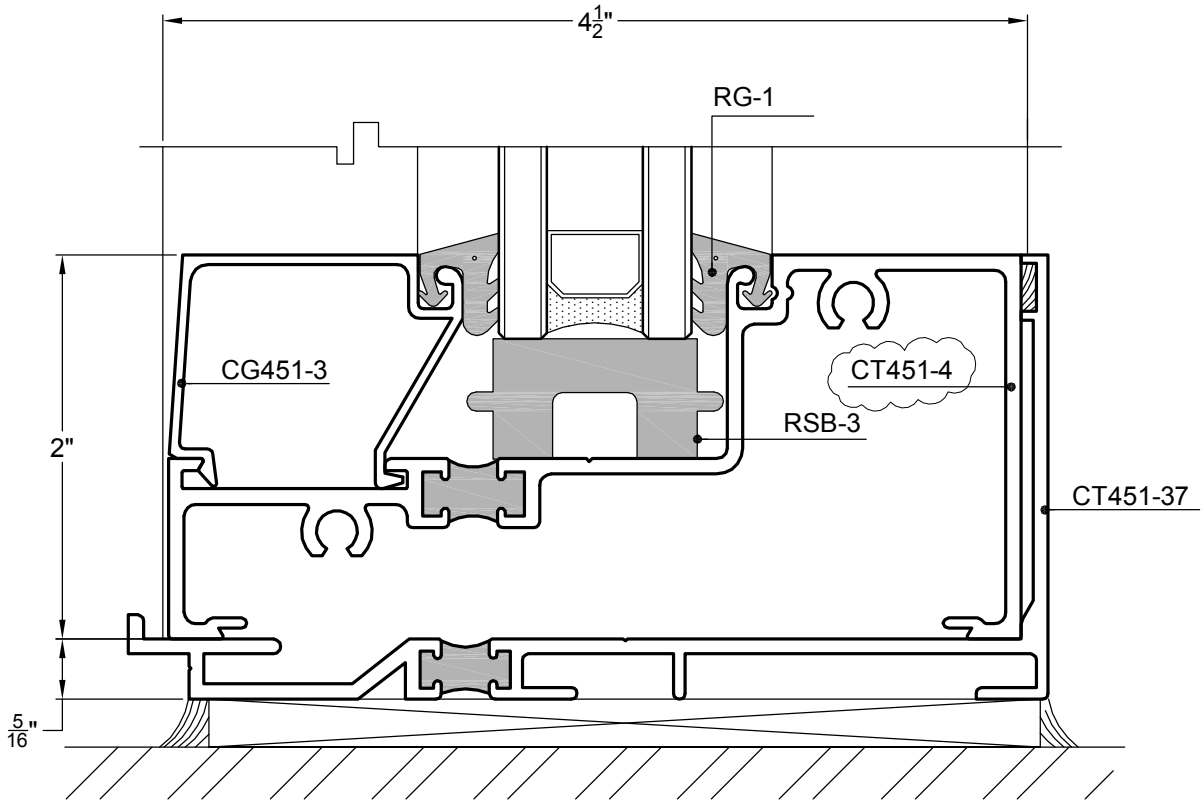

12 SILL

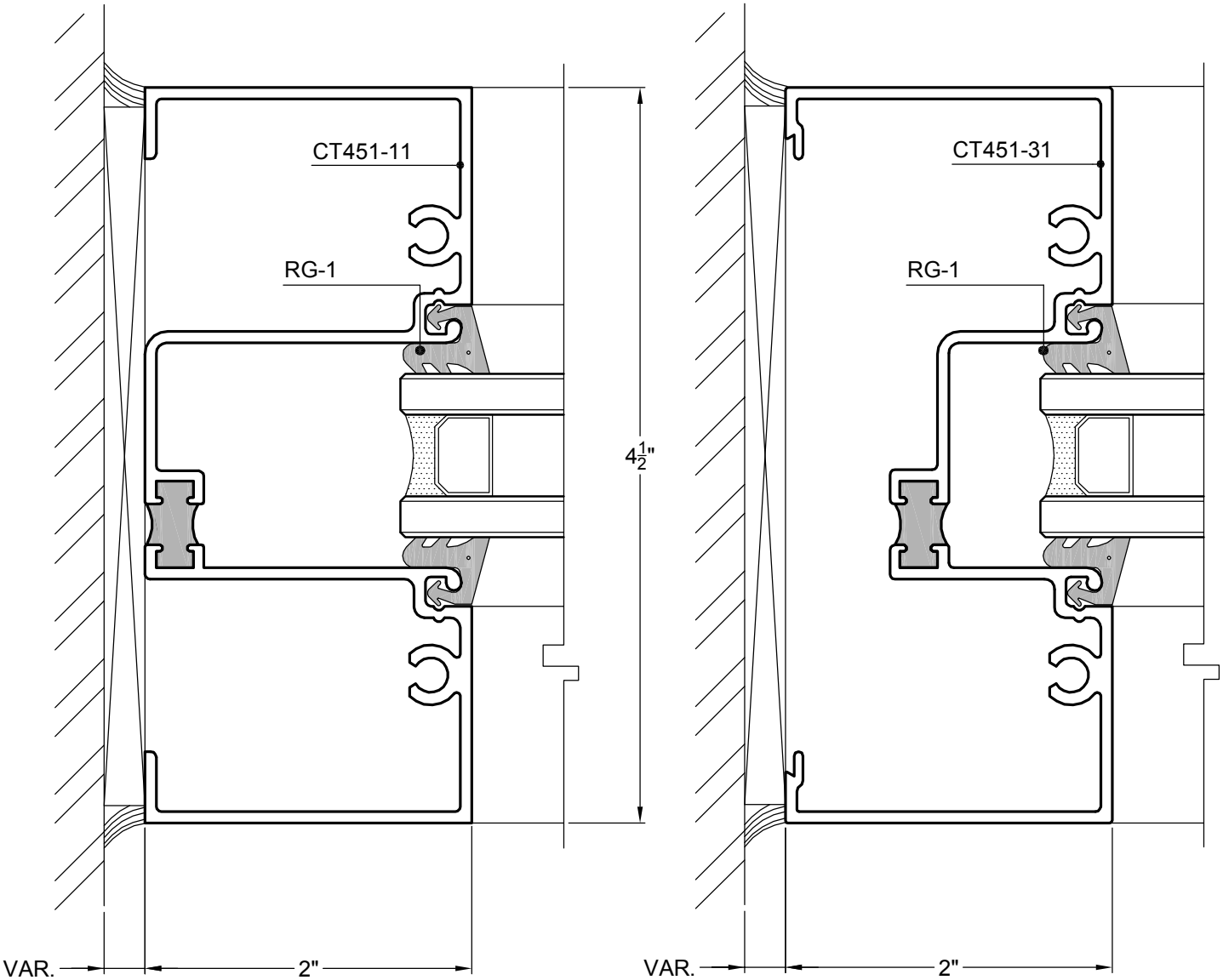

20A DEEP POCKET JAMB

20 JAMB

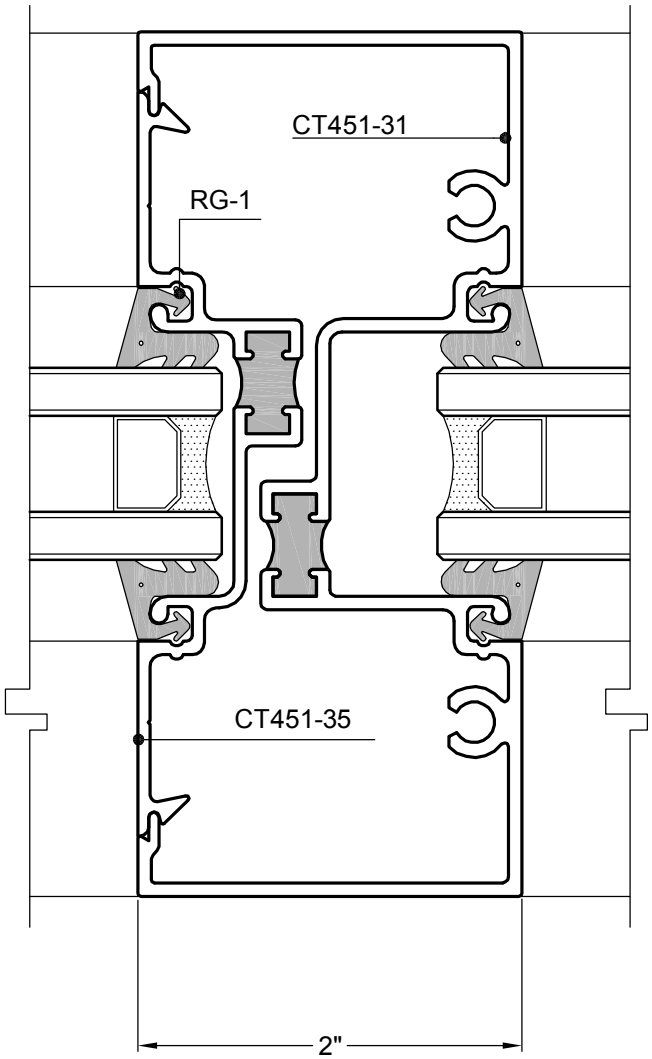

21 LIGHT MULLION

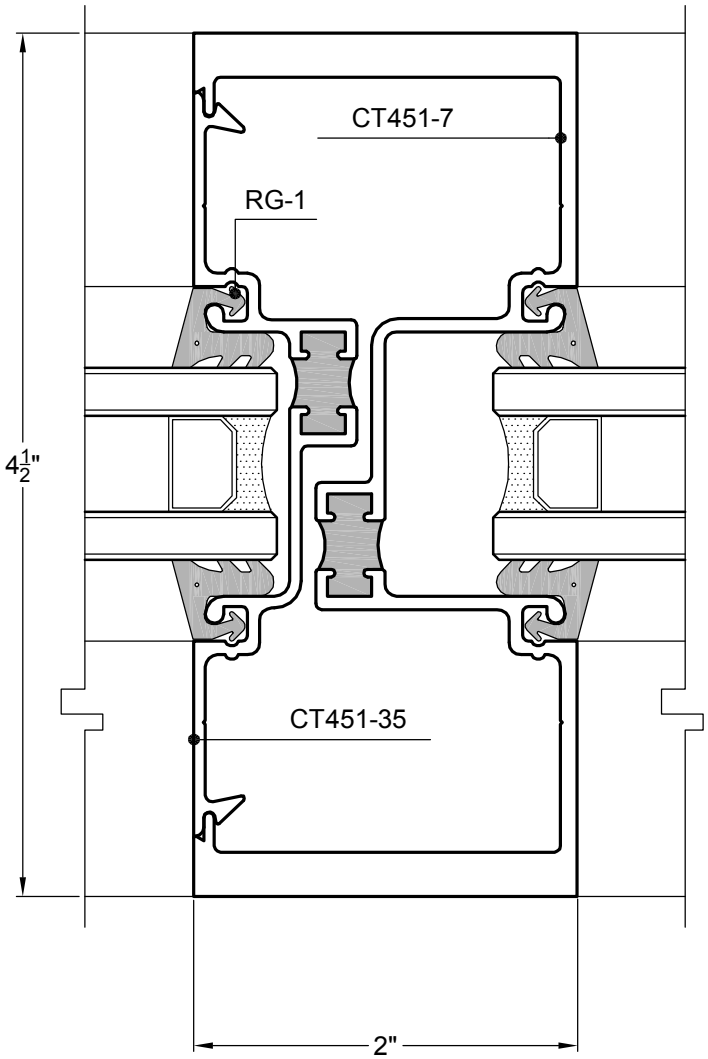

22 HEAVY MULLION

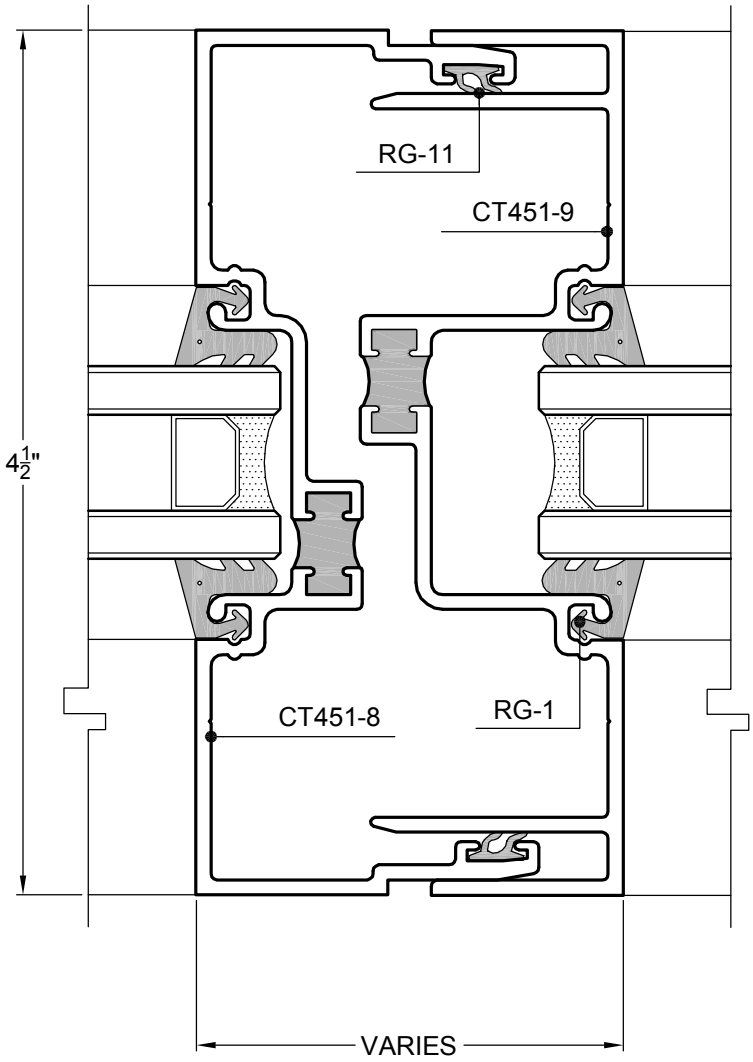

23 EXPANSION MULLION

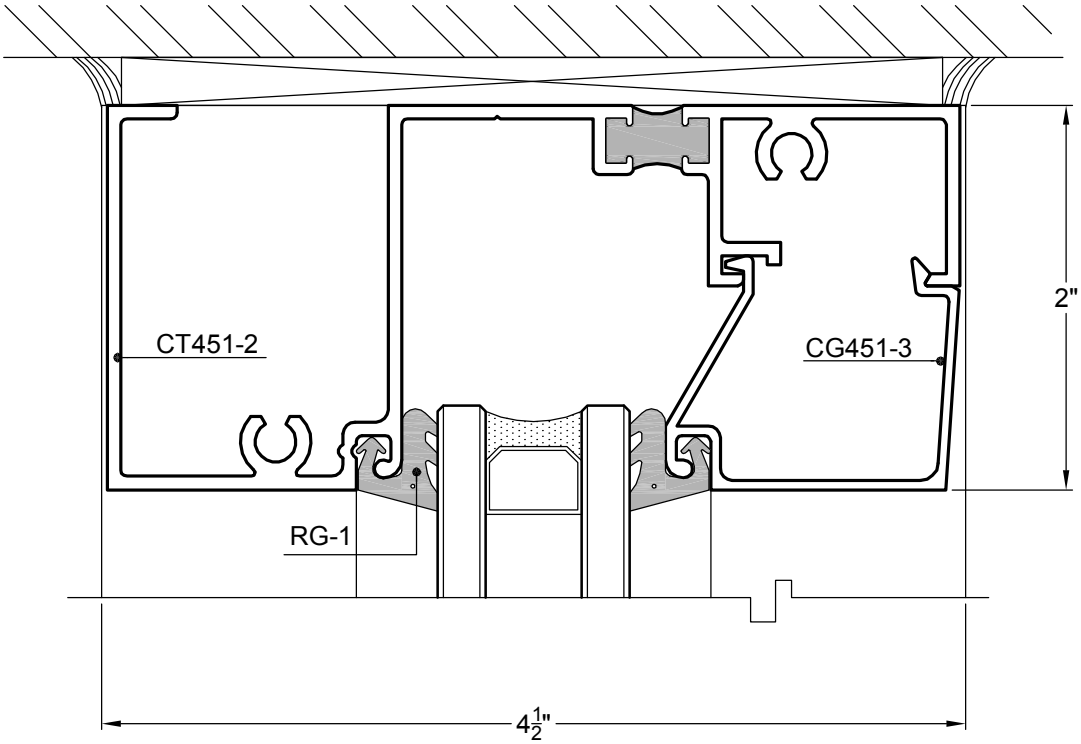

51 HEAD

INSIDE GLAZED APPLICATION

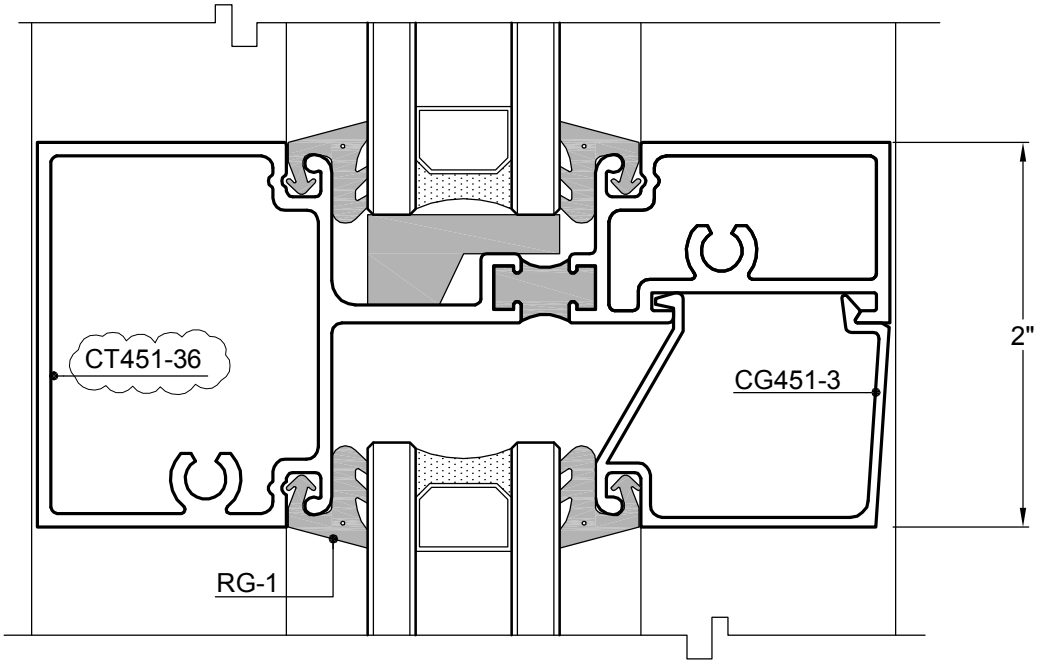

52 INTERMEDIATE HORIZONTAL

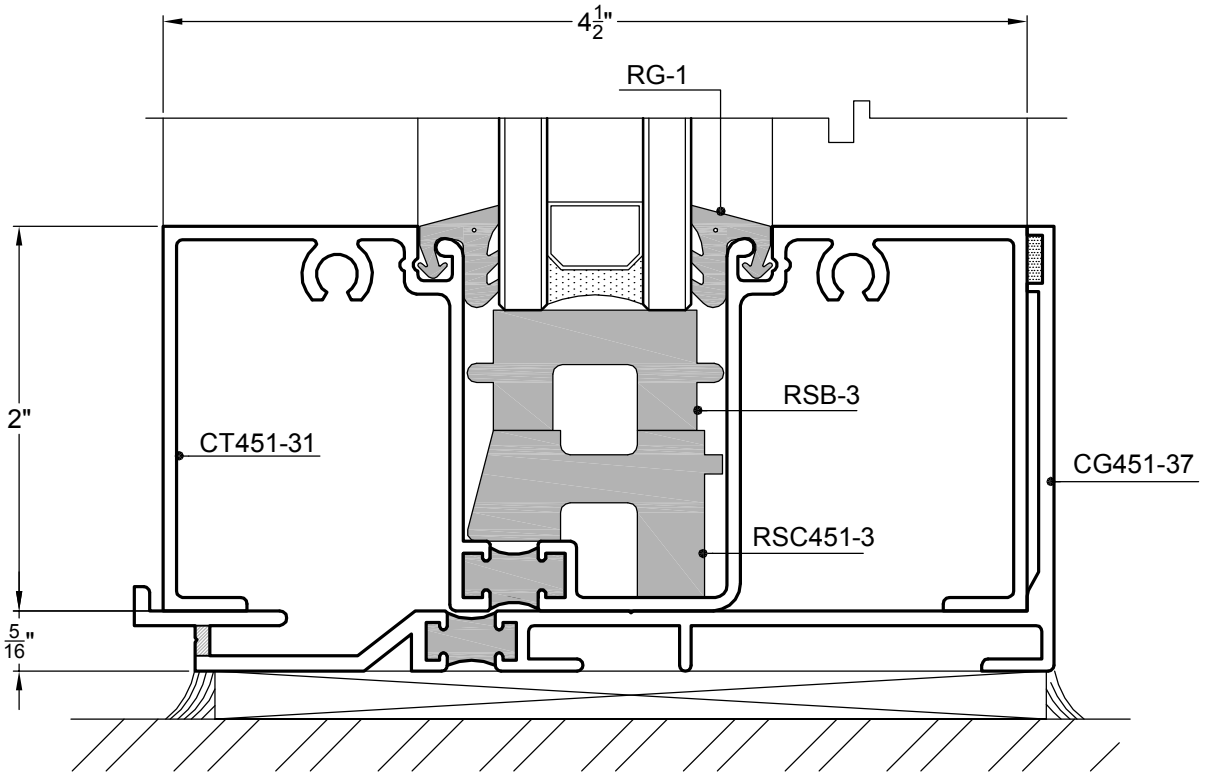

53 SILL

INSIDE GLAZED APPLICATION

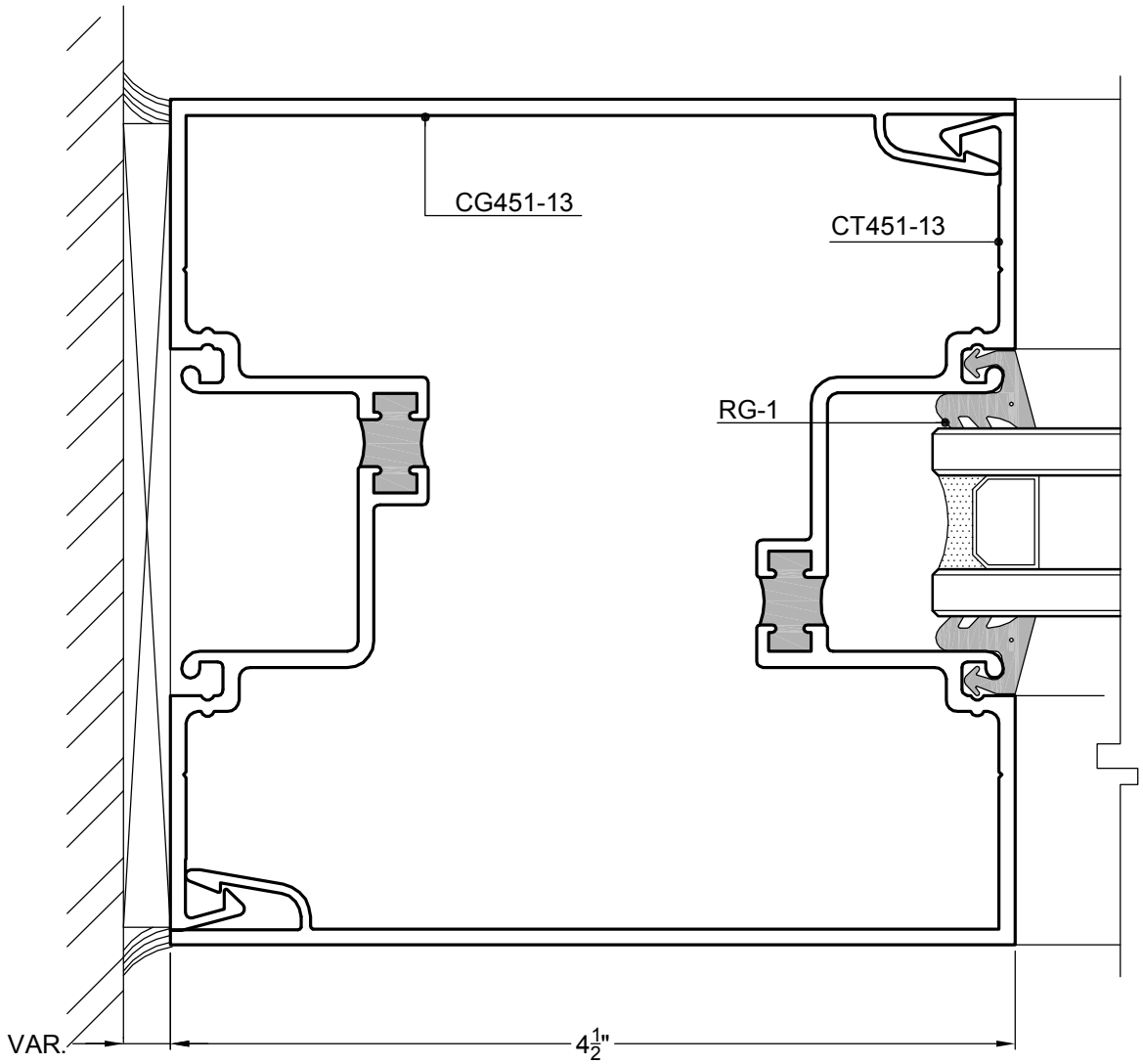

70 WIDE JAMB

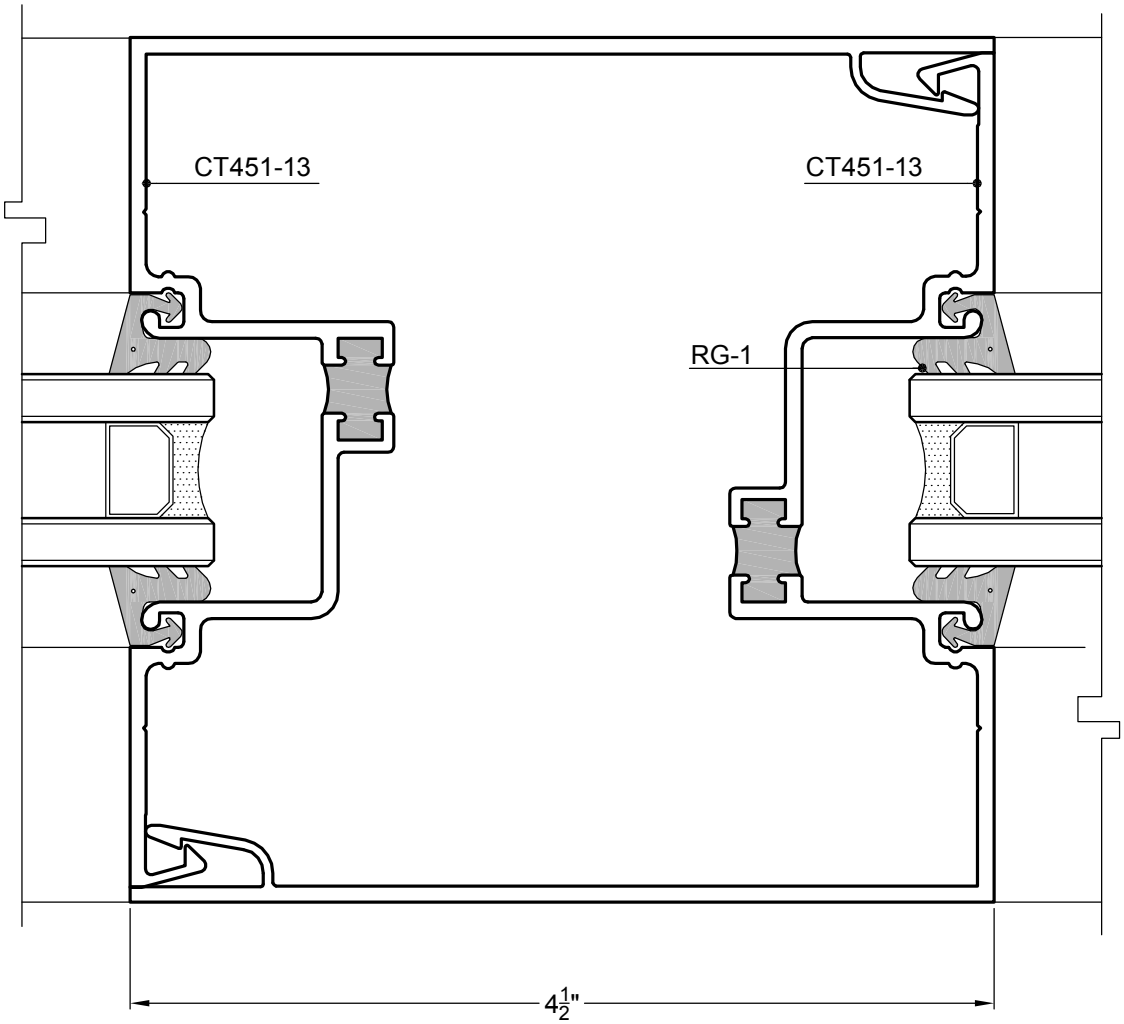

71 INTERMMEDIATE WIDE MULLION

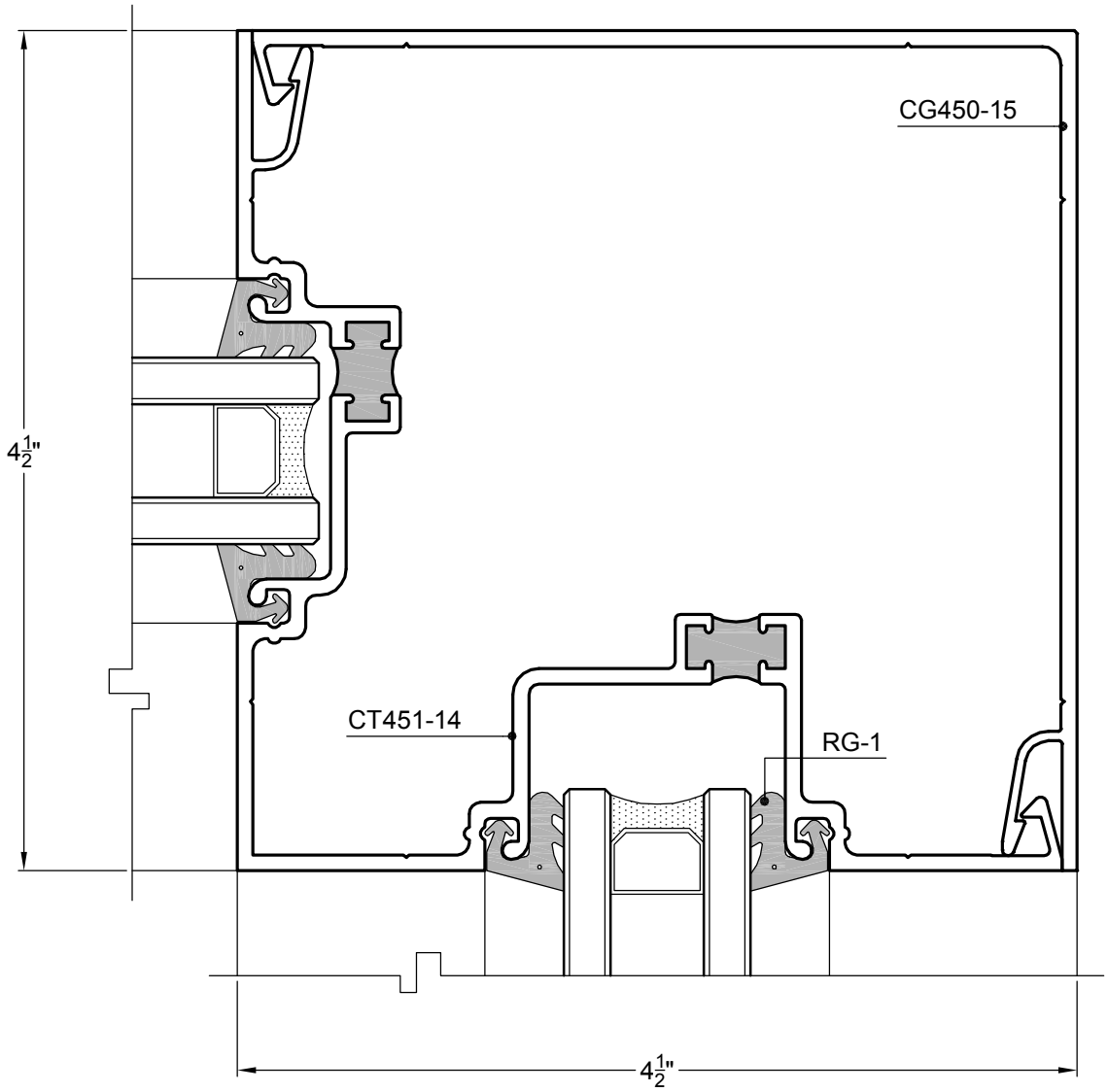

72 WIDE OUTSIDE CORNER

73 WIDE INSIDE CORNER (SIMILAR)

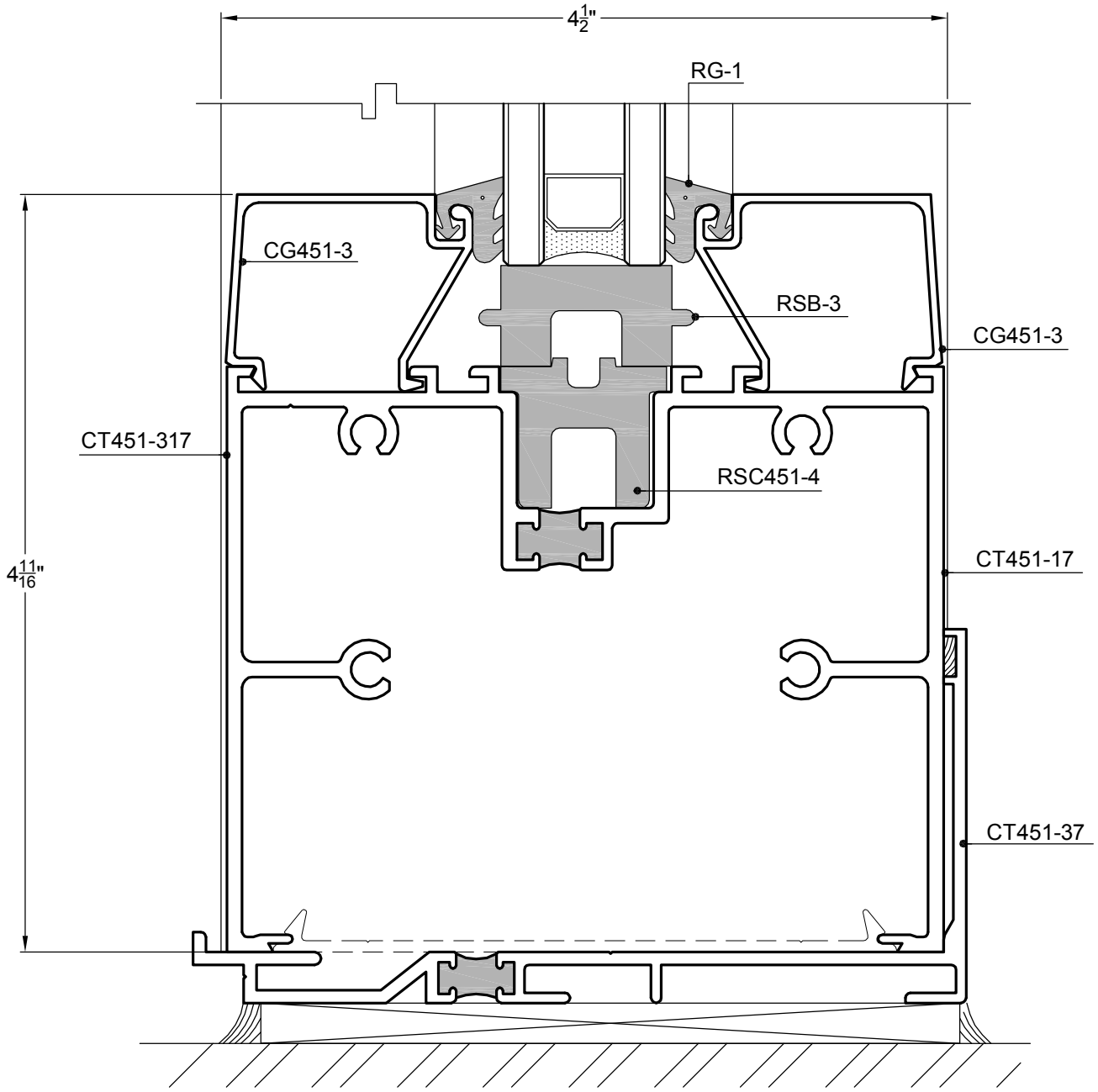
4 1/2"
RG-1
CG451-3
RSB-3
CG451-3
CT451-317
RSC451-4
4 11/16"
CT451-17
CT451-37

74 TALL SILL

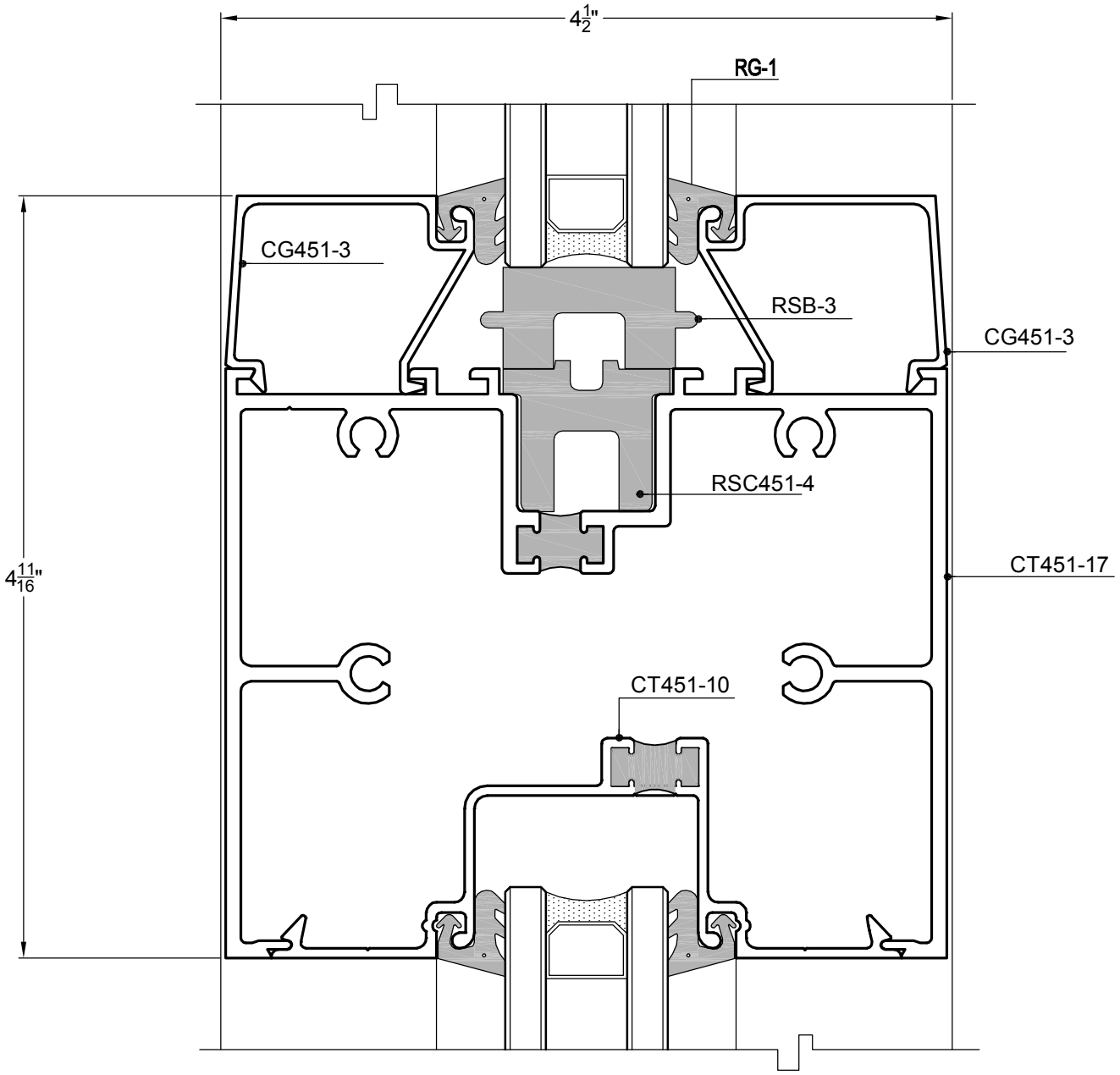

75 TALL INTERMEDIATE HORIZONTAL

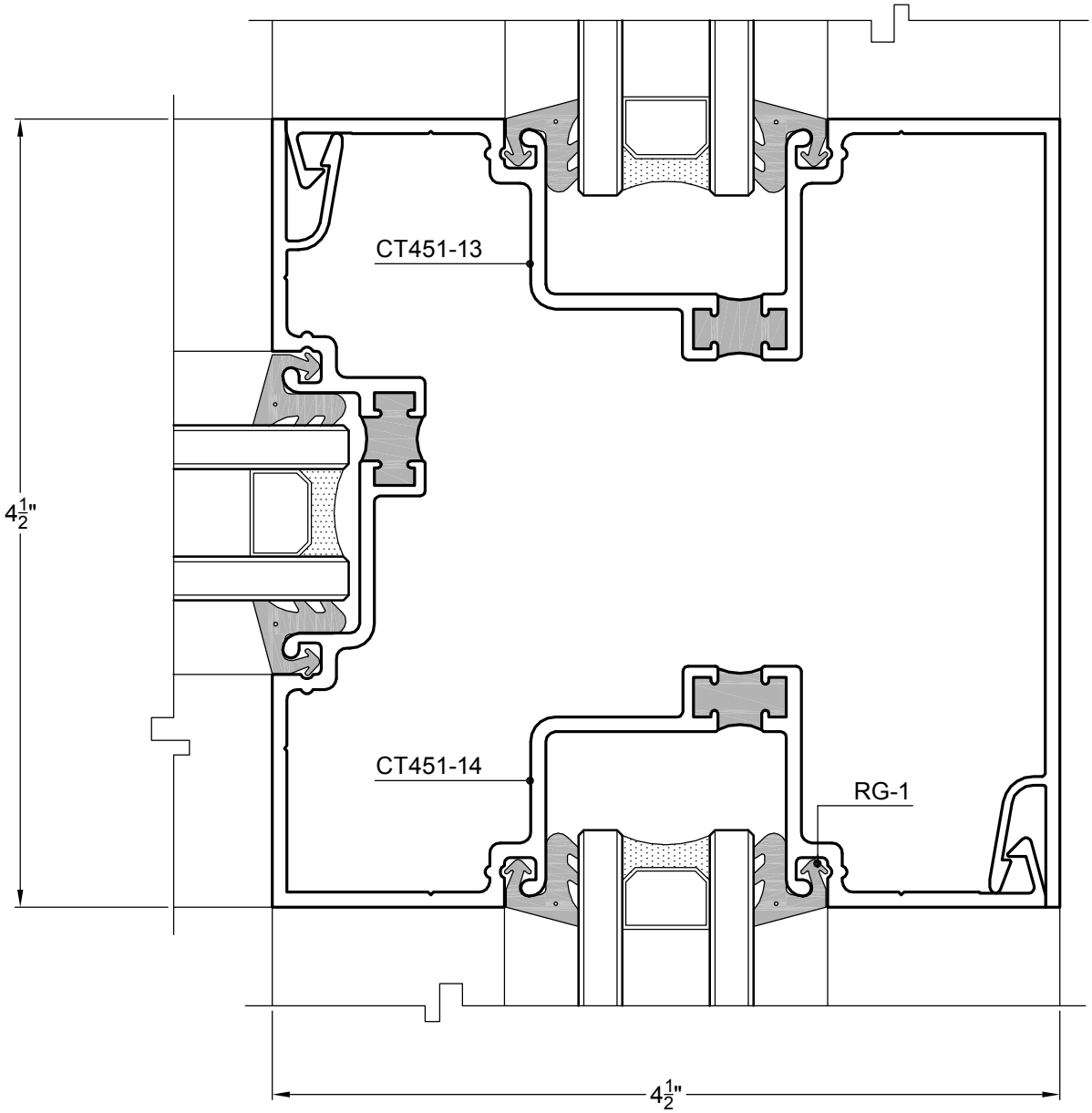

71A WAY CORNER

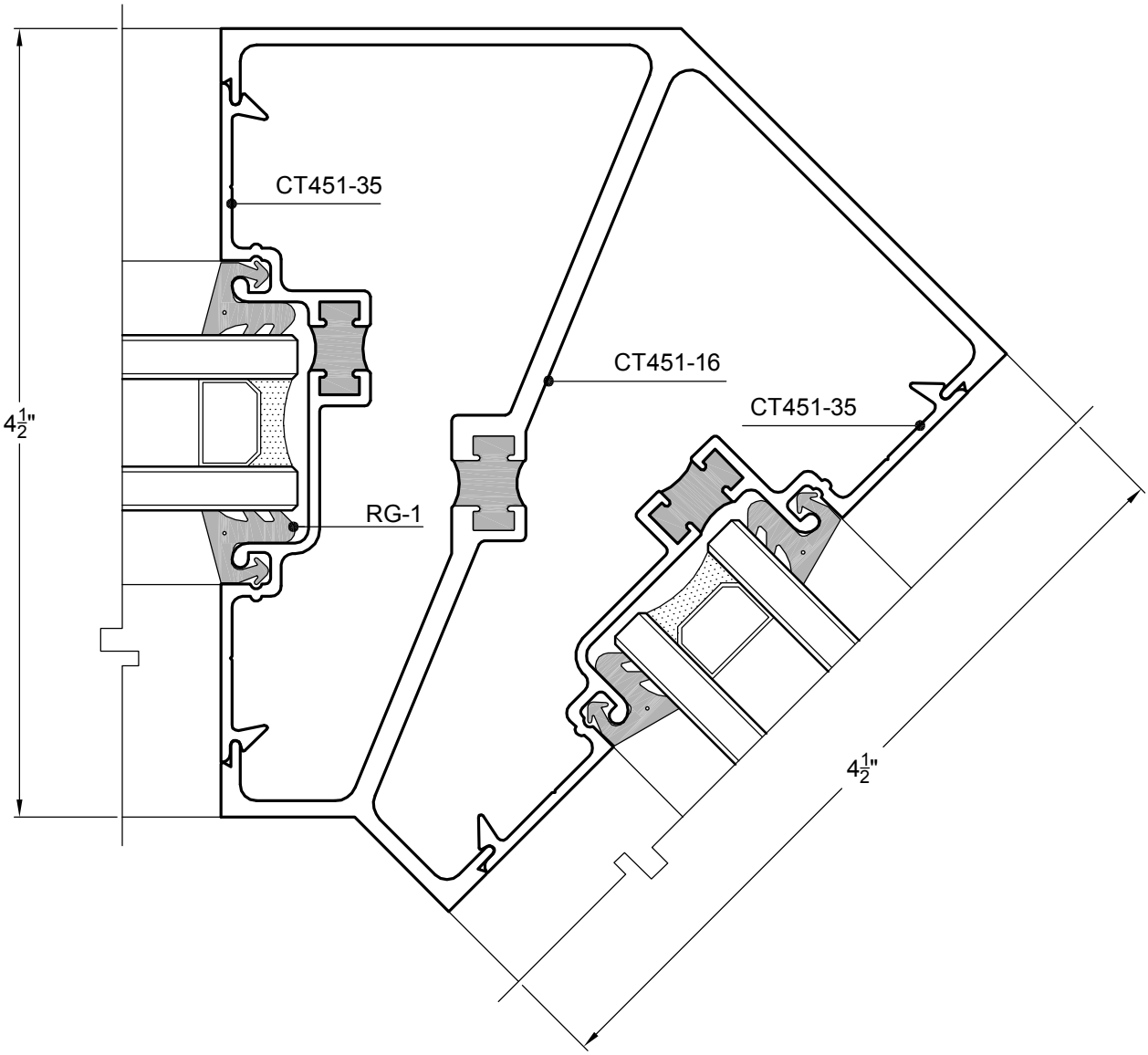

80 135 ° CORNER

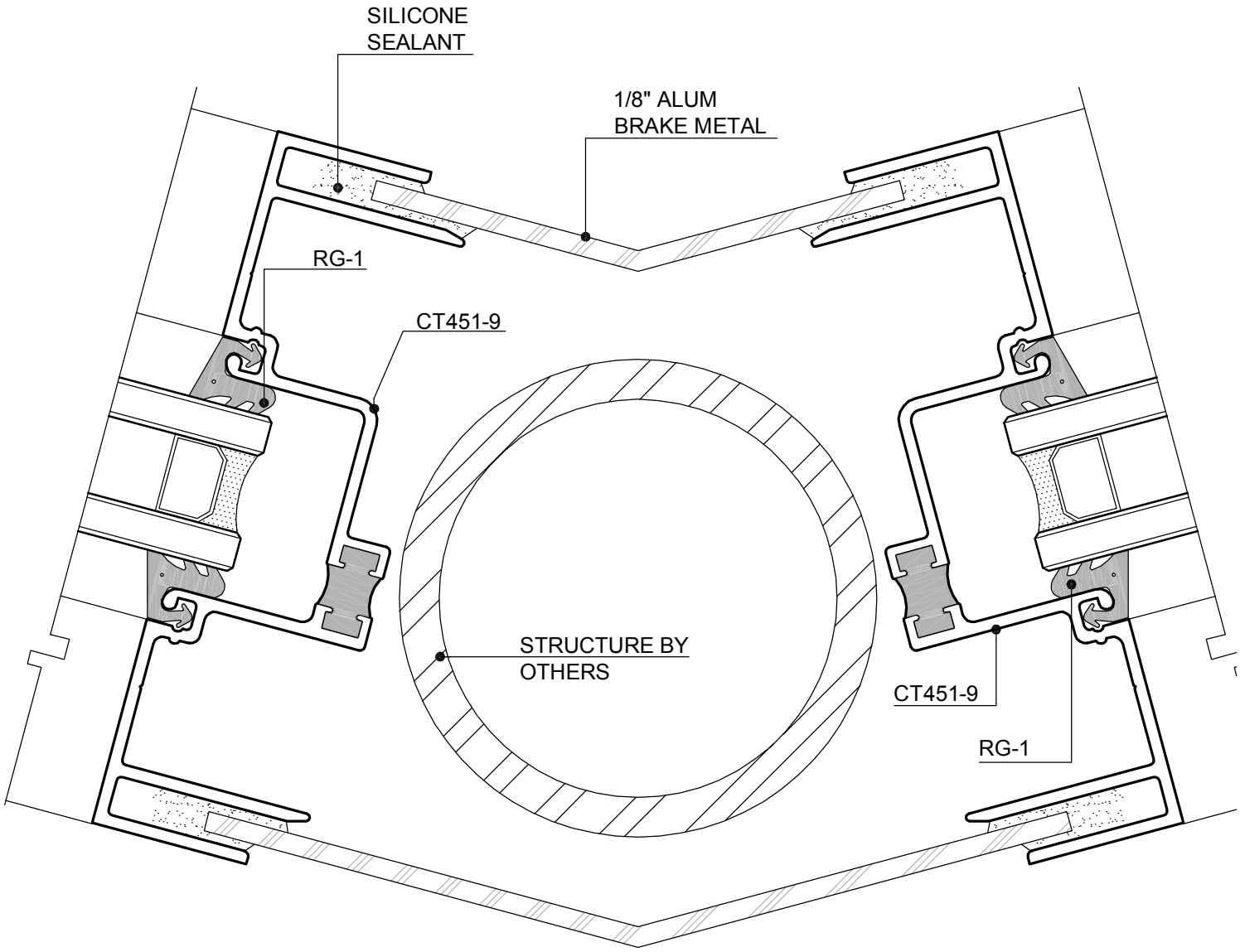

81 BREAK METAL POST COVER

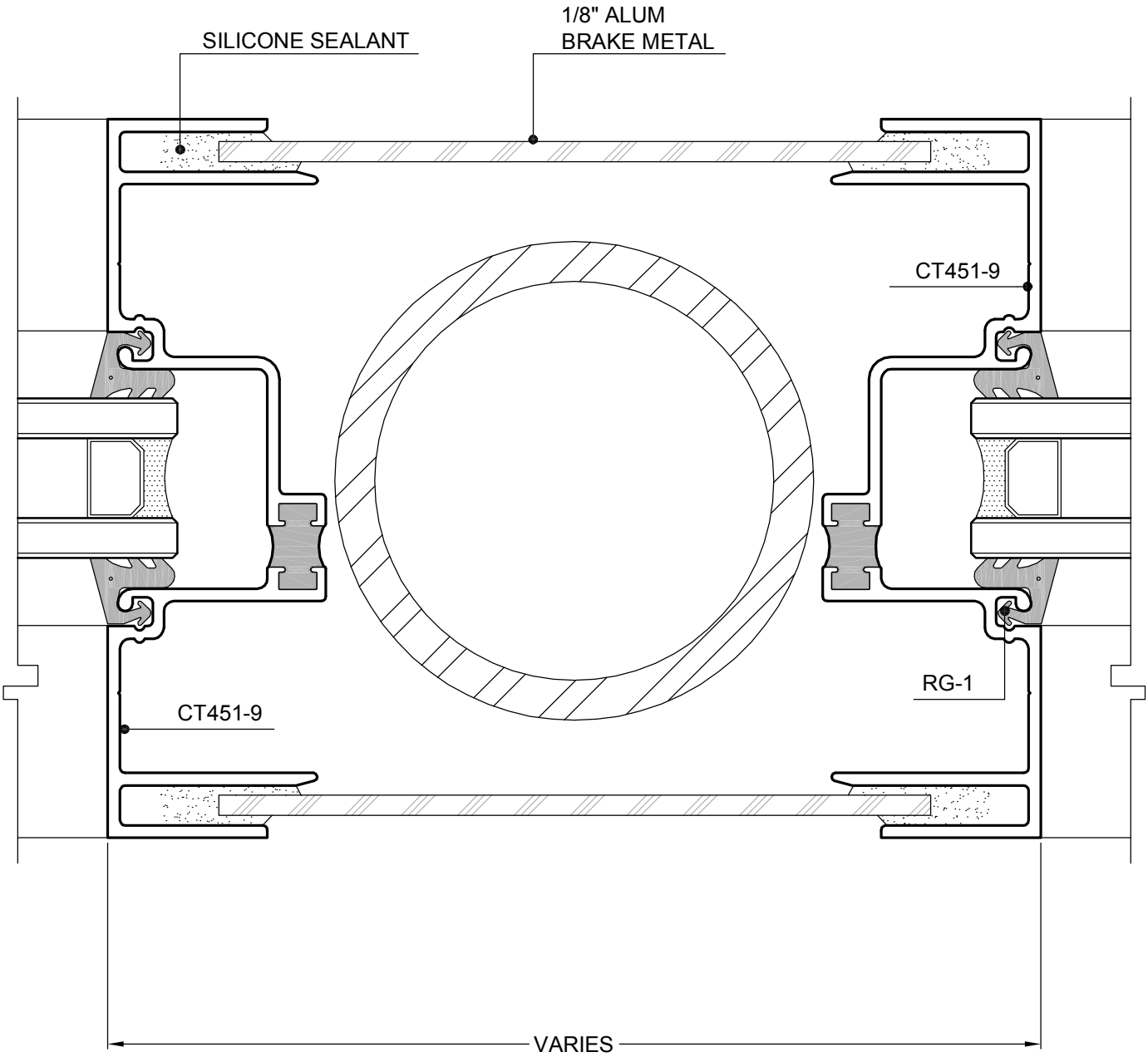

82 BREAK METAL POST COVER

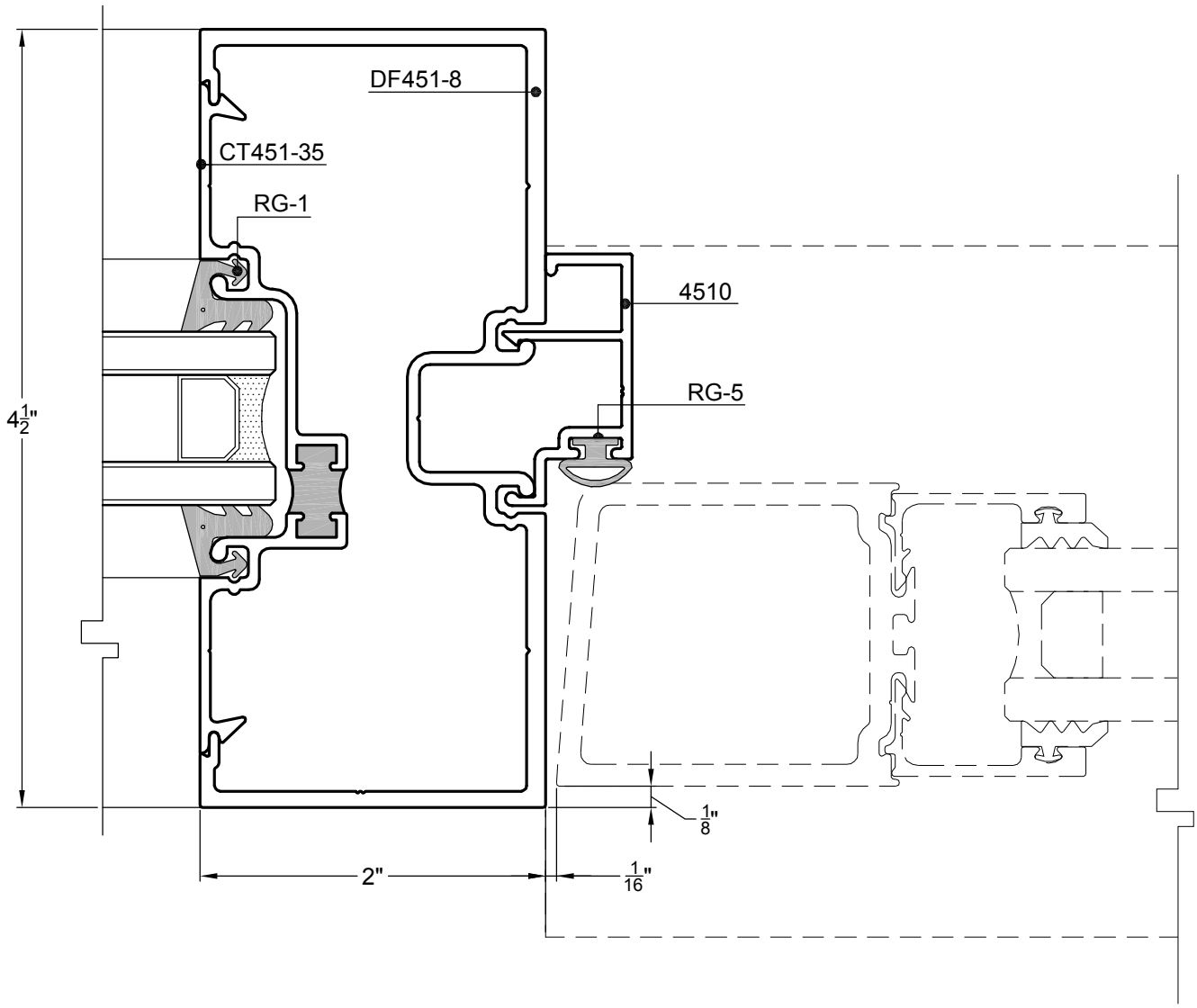

30 DOOR JAMB

NOTE:
DF118 MUST BE SLID INTO DF451-8
FIRST BEFORE ASSEMBLING FRAME.

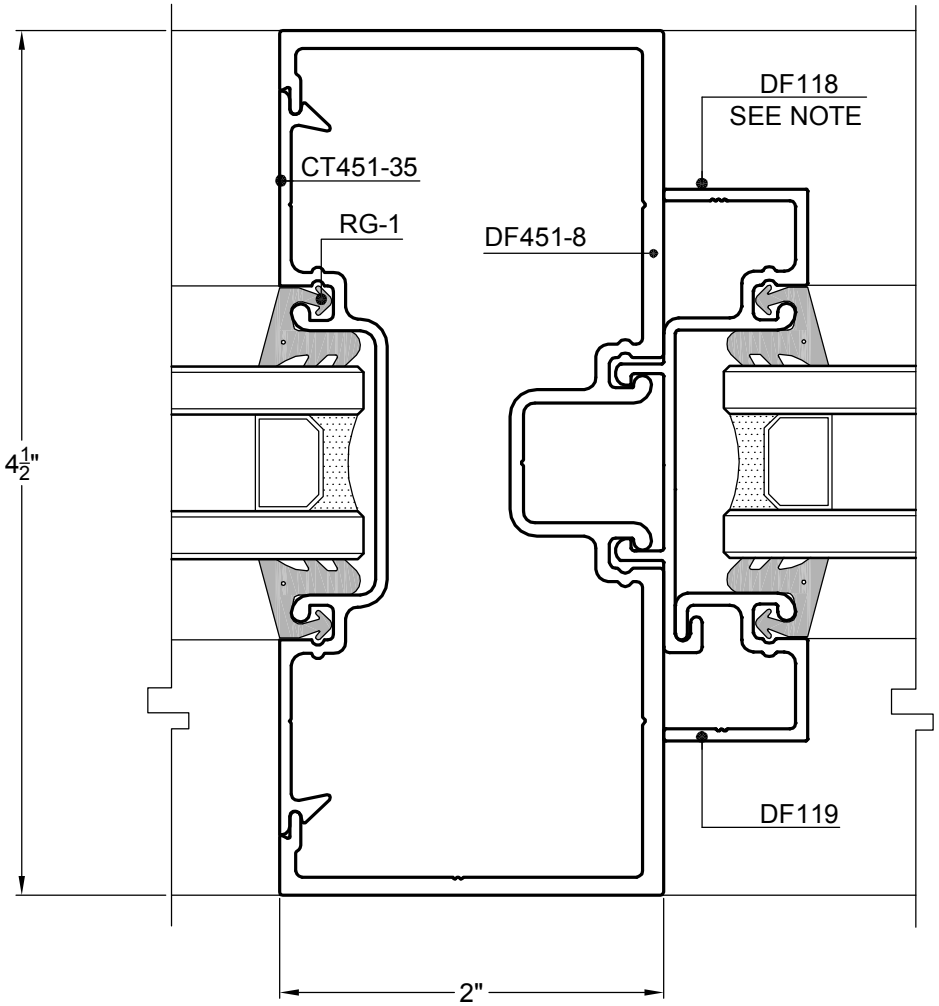

31 DOOR TRANSOM DETAIL

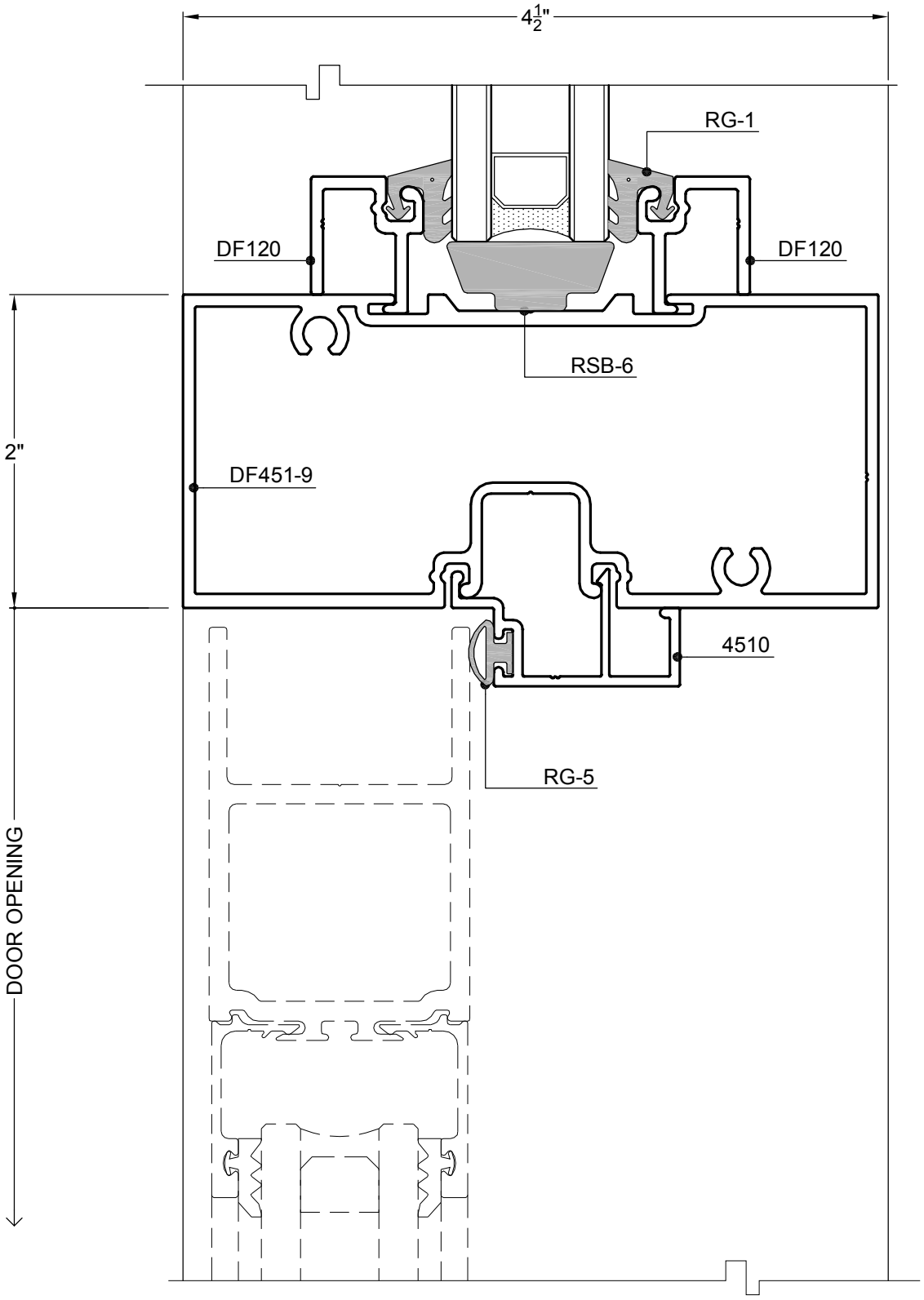

40 DOOR HEAD

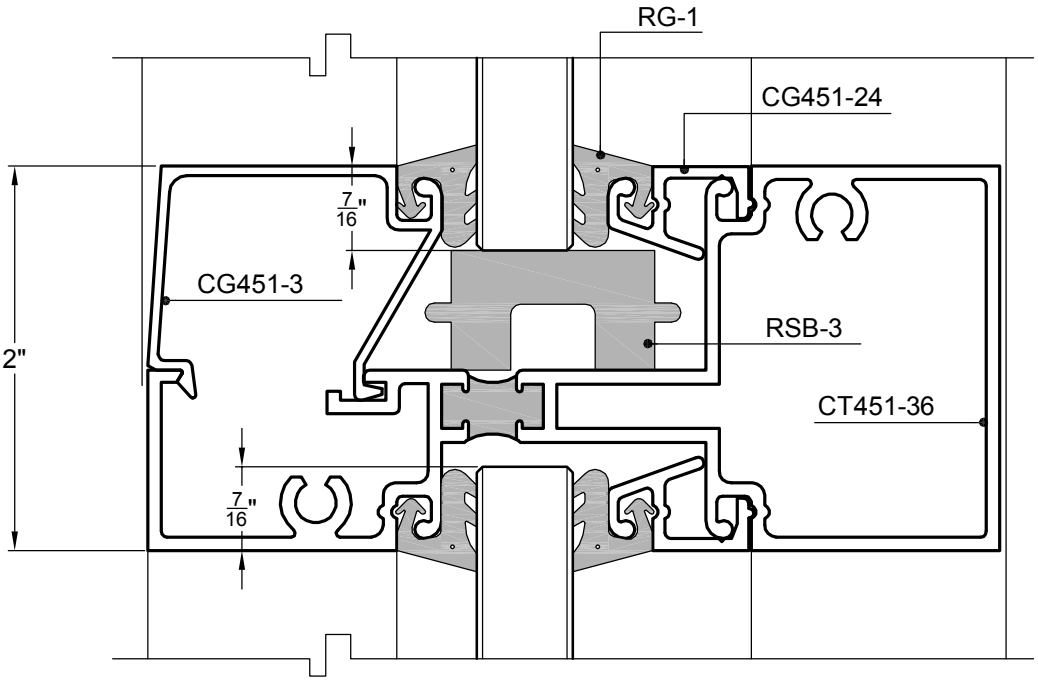

TYPICAL 1/2" GLAZING OPTION

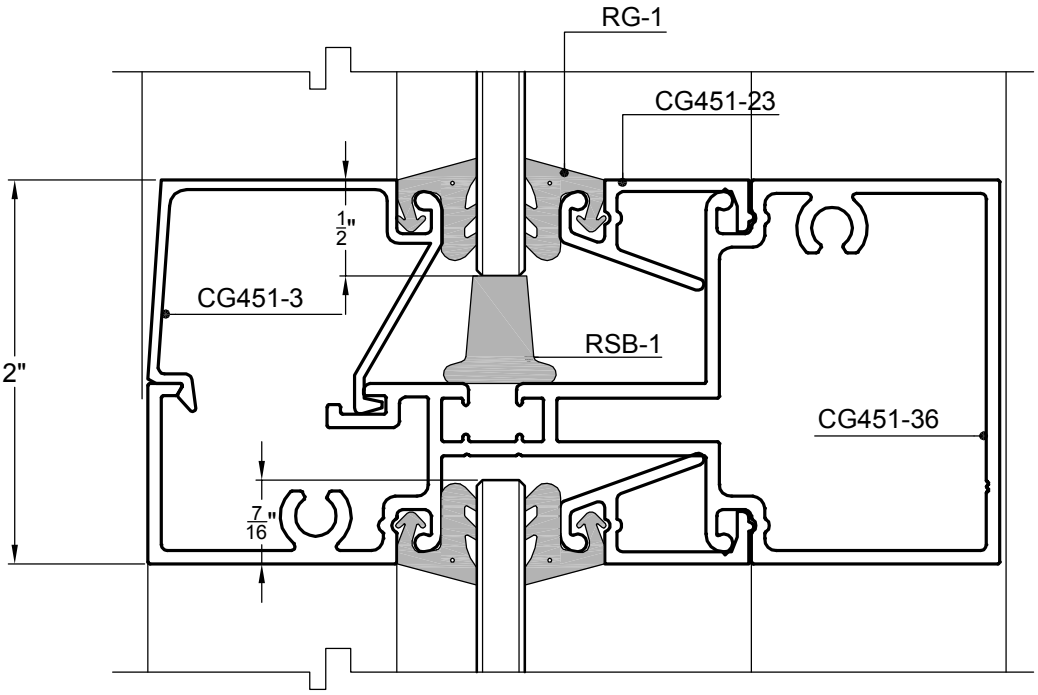

TYPICAL 1/4" GLAZING OPTION

CT451 PARTS TABLE

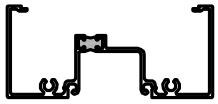	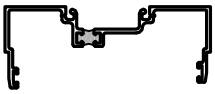	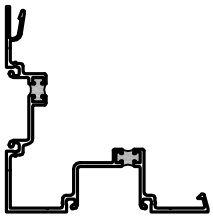	
CT451-31 HEAD/JAMB/VERTICAL MULLION	CT451-8 MALE EXPANSION MULLION	CT451-14 90° CORNER POST - 2 POCKET	CG450-26 MALE TWO PIECE HEAD RECEPTOR
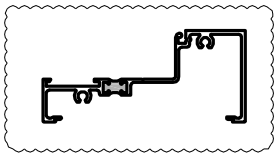		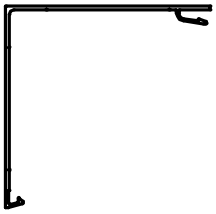	
CT451-4 SILL/HEAD	CT451-9 FEMALE EXPANSION MULLION	CG450-15 90° CORNER POST COVER	CT450-27 FEMALE TWO PIECE HEAD RECEPTOR
	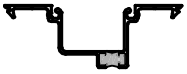	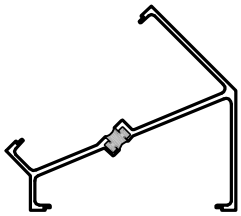	
CG451-3 GLASS STOP	CT451-10 MULLION FILLER DP POCKET	CT451-16 45/135° CORNER POST	RG-1 STANDARD GLAZING GASKET
	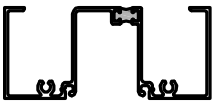	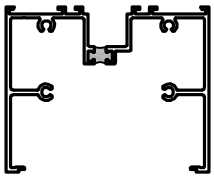	
CT451-35 VERTICAL FILLER	CT451-11 WALL JAMB/HEAD DP-POCKET	CT451-17 4 1/2" X 4 1/2" BULKHEAD	RG-2 LIGHT GLAZING GASKET
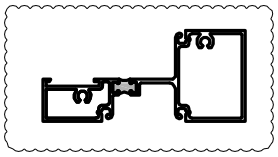	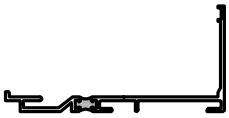		
CT451-36 INTERMEDIATE HORIZONTAL	CT451-7 SILL FLASHING	CG450-18 FLAT FILLER PLATE	RG-3 HEAVY GLAZING GASKET
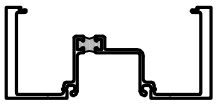	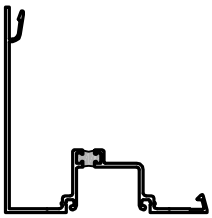		
CT451-7 HEAVY DUTY VERTICAL	CT451-13 90° CORNER POST - 1" POCKET	CG451-21 GLASS POCKET FILLER	RG-11 GASKET

CS451 PARTS TABLE

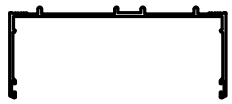		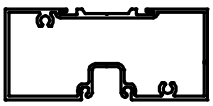	
CS451-1 HEAD CHANNEL	CS451-6 INTERMEDIATE HORIZONTAL	DF451-9 T-BAR HEADER	
CS451-2 HEAD FILLER	CS451-7-1 SHEAR BLOCK	DF118 1" TRANSOM SASH	
CS451-3 SILL CAN		DF451-9 T-BAR HEADER	
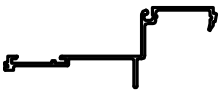			
CS451-4 SILL CAN FILLER		DF120 TRANSOM GLASS STOP	
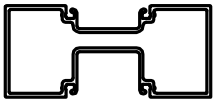			
CS451-5 VERTICAL MULLION		DF119 JAMB TRANSOM STOP	